Dimension Guide

Extractor hood

Model:
ECC9092S

Dimensions

	width	height	depth
Product (mm)	899	698-1012	515

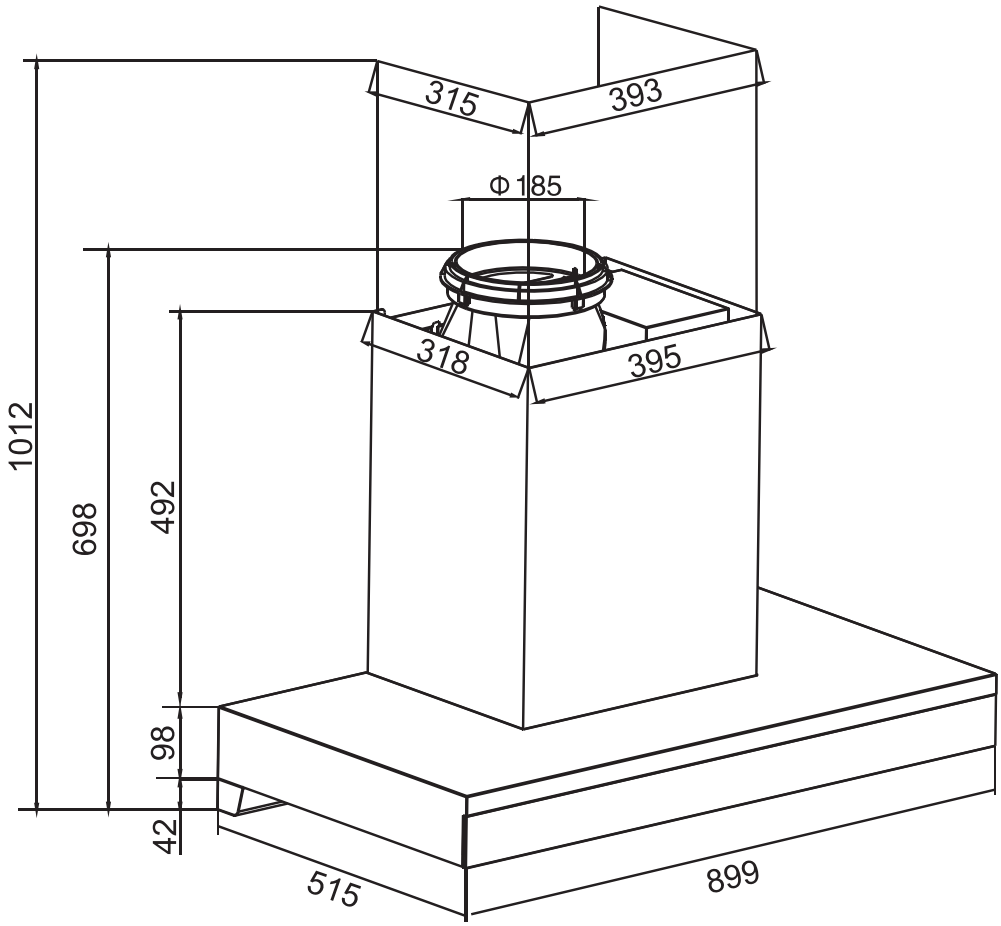

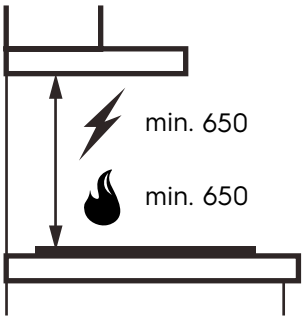

Please note! Dimensions to be used as a guide only. All customers MUST refer to the user manual supplied with the product for detailed installation instructions.

© 2022 Electrolux S.E.A PTE. LTD. E_DIM_ECC9092S_Jun22

ULTIMATETASTE

Electrolux