EWW1142ADWA
EWW1142ADSA

Washer - Dryer
洗衣干衣机

User Manual
用户手册

Electrolux

IMPORTANT INFORMATION THAT MAY IMPACT YOUR MANUFACTURER'S WARRANTY

Adherence to the directions for use in this manual is extremely important for health and safety. Failure to strictly adhere to the requirements in this manual may result in personal injury, property damage and affect your ability to make a claim under the Electrolux manufacturer's warranty provided with your product. Products must be used, installed and operated in accordance with this manual. You may not be able to claim on the Electrolux manufacturer's warranty in the event that your product fault is due to failure to adhere to this manual.

WE'RE THINKING OF YOU

Thank you for purchasing an Electrolux appliance. You've chosen a product that brings with it decades of professional experience and innovation. Ingenious and stylish, it has been designed with you in mind. So whenever you use it, you can be safe in the knowledge that you'll get great results every time. Welcome to Electrolux.

Visit our website to:

Get usage advice, brochures, trouble shooter, service information, buy accessories & spare parts, online product registration : **www.electrolux.com.cn.cn**

CUSTOMER CARE AND SERVICE

We recommend the use of original spare parts.When contacting Service, ensure that you have the following data available. The information can be found on the rating plate. Model, PNC, Serial Number.

Warning / Caution-Safety information.

General information and tips

Environmental information.

Subject to change without notice.

CONTENTS

1. SAFETY INFORMATION
   1.1 Conditions Of Use 4
   1.2 Child Safety 5
   1.3 General Safety 5
   1.4 Installation 6
   1.5 Use 6

2. PRODUCT DESCRIPTION
   2.1 Parts 8
   2.2 Accessories 9

3. CONTROL PANEL
   3.1 Control Panel Description 10
   3.2 Program Chart 11
   3.3 Program Options Compatibility 12
   3.4 Options 13
   3.5 Settings 17
   3.6 Start/Pause (▷‖) and Add Clothes ( ) Touchpad 17

4. BEFORE FIRST USE 18

5. DAILY USE - WASHING (Only)
5.1 Loading The Laundry..... 19
5.2 Using Detergent And Additives ... 19
5.3 Options Setting..... 20
5.4 Starting A Cycle (▷‖)..... 21
5.5 Interruption Of A Program..... 21
5.6 Changing A Program..... 21
5.7 Changing The Options 21
5.8 Opening The Door..... 21
5.9 At The End Of The Program..... 22
5.10 When The Washing Program Is Completed, But There Is Water In The Drum..... 22
5.11 AUTO Off Mode 22

6. DAILY USE - DRYING (Only)..... 23

7. DAILY USE - WASHING & DRYING (Non-Stop Program)
7.1 Washing Program + “Dryness Level” Option 23
7.2 Washing Program + “Time Dry ” Option..... 24

8. WASHING HINTS
8.1 Sorting The Laundry..... 25
8.2 Temperatures..... 25
8.3 Before Loading The Laundry..... 25
8.4 Maximum Loads..... 25
8.5 Removing Stains..... 25
8.6 Detergents Type And Quantity Of Detergent 26

9. DRYING HINTS
9.1 Preparing The Drying Cycle..... 27
9.2 Laundry Not Suitable For Drying. 27
9.3 Garment Labels..... 27
9.4 Drying Cycle Duration 27
9.5 Additional Drying..... 28

10. INTERNATIONAL WASH CODE SYMBOLS 28

11. CARE AND CLEANING
11.1 External Cleaning..... 29
11.2 Descaling 29
11.3 After Each Wash 29
11.4 Maintenance Wash With “Tub Clean” Program 29
11.5 Cleaning The Dispenser Drawer. 29
11.6 Cleaning The Drawer Recess 30
11.7 Cleaning The Pump..... 30
11.8 Cleaning The Water Inlet Filter ... 32
11.9 Frost Precautions..... 33

12. TROUBLESHOOTING
12.1 Possible Failures..... 34
12.2 Emergency Door Opening..... 38

13. TECHNICAL DATA 39

14. INSTALLATION
14.1 Unpacking 39
14.2 Positioning 41
14.3 Water Inlet..... 42
14.4 Water Drainage 42
14.5 Electrical Connection..... 44

15. ENVIRONMENT CONCERNS
15.1 Packaging Materials..... 44
15.2 Old Machine 44
15.3 Ecological Hints..... 44

1. ⚠ SAFETY INFORMATION

1.1 Conditions Of Use

This appliance is intended to be used in household and similar applications such as:

- staff kitchen areas in shops, offices and other working environtment;
- farm houses;
- by clients in hotels, motels, and other residential type environments;
- bed and breakfast type environtments;
- areas for communal use in blocks of flats or in launderettes.

⚠ **WARNING!** The appliance must not be supplied through an external switching device, such as timer, or connected to a circuit that is regularly switched on and off by utility.

In the interest of your safety and to ensure the correct use, before installing and first using the appliance, read this user manual carefully, including its hints and warnings.

To avoid unnecessary mistakes and accidents, it is important to ensure that all people using the appliance are thoroughly familiar with its operation and safety features.

Save these instructions and make sure that they remain with the appliance if it is moved or sold, so that everyone using it through its life will be properly informed on appliance use and safety.

1.2 Child Safety

- This Wahser-Dryer is not intended for use by young children or infirm persons without supervision.
- Young children should be supervised to ensure that they do not play with the appliance.
- The packaging components (e.g. plastic film, polystyrene) can be dangerous to children - danger of suffocation! Keep them out of children's reach.
- Keep all detergents in a safe place out of children's reach.
- Make sure that children or pets do not climb into the drum.
- This machine is provided with child safety lock option ( ) to prevent children playing with the control panel. (see page 17)

1.3 General Safety

- It is dangerous to alter the specifications or attempt to modify this product in any way.
- During high temperature wash program the door glass may get hot. Do not touch it!
- Make sure that small pets do not climb into the drum. To avoid this, please check inside the drum before using the appliance.
- Any objects such as coins, safety pins, nails, screws, stones or any other hard, sharp material can cause extensive damage and must not be placed into the machine.
- Wash small items such as socks, laces, washable belts etc in a washing bag or pillow case as it is possible for such items to slip down between the tub and the inner drum.
- Only use manufacturer's recommended quantities of fabric softener and detergent. Damage to the fabric or appliance can occur if you exceed the recommended amount.
- Do not use your Wahser-Dryer to wash articles with whalebones, material without hems or torn material.
- Always unplug the appliance and turn off the water supply after use, clean and maintenance.
- This appliance is not intended for use by persons (including children) with reduced physical, sensory or mental capabilities, or lack of experience and knowledge, unless they have been given supervision or instruction concerning use of the appliance by a person responsible for their safety.

- Under no circumstances should you attempt to repair the machine yourself. Repairs carried out by inexperienced persons may cause injury or serious malfunctioning. Contact your local Service Centre. Always insist on genuine spare parts.

1.4 Installation

- This appliance is heavy. Care should be taken when moving it.
- When unpacking the appliance, check that it is not damaged. If in doubt, do not use it and contact the Service Centre.
- All packing and transit bolts must be removed before use. Serious damage can occur to the product and to property if this is not adhered to. See relevant section in the user manual.
- After having installed the appliance, check that it is not standing on the inlet and drain hose and the worktop is not pressing the electrical supply cable.
- If the appliance is installed on a carpeted floor, please adjust the feet in order to allow air to circulate freely.
- Always be sure, that there is no water leakage from hoses and their connections after the installation.
- Any plumbing work required to install this appliance should be carried out by a qualified plumber.
- Any electrical work required to install this appliance should be carried out by a qualified electrician.

May cause electric shock! if the machine is not connected to an earthed/ground system. DO NOT touch the wet clothes and metal parts.

For safety reasons do not use double adaptors, extension cords and multi-plug adapters.

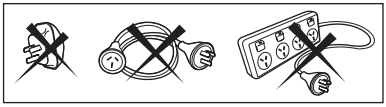

1.5 Use

- Only wash fabrics which are designed to be machine washed. Follow the instructions on each garment label.
- Do not overload the appliance. See the relevant section in the user manual.
- Before washing, ensure that all pockets are empty and buttons and zips are fastened. Avoid washing frayed or torn articles and treat stains such as paint, ink, rust, and grass before washing.
- Garments which have been in contact with volatile petroleum products should not be machine washed. If volatile cleaning fluids are used, care should be taken to ensure that the fluid is removed from the garment before placing in the machine.
- Never pull the power supply cable to remove the plug from the socket; always take hold of the plug itself.
- Never use the Wahser-Dryer if the power supply cable, the control panel, the working surface or the base are damaged so that the inside of the Wahser-Dryer is accessible.
- As some duvets and eiderdowns should be washed/dried in large commercial machine because of their bulk, please check with the manufacturer of the item before washing/drying in a domestic machine.

- The users should always check that they have not left their gas lighters (disposable or otherwise) in their clothing.
- Never tumble dry items which have had contact with chemicals such as dry cleaning fluid. These are of volatile nature and could cause an explosion. Only tumble dry items which have been washed in water or require airring.
- Plastic detergent dispensers should not remain in the drum during the drying cycle, as the plastic used is not designed to withstand the heat. If you wish to wash-through-to dry you should use the conventional detergent dispenser drawer.

CAUTION!

- Never stop a washer-dryer before the end of the drying cycle unless all items are quickly removed and spread out so that the heat is dissipated.
- Do not dry cloths in washer-dryer with dry clean solvents. Also, do not use laundry enhancement products during the drying cycle.

To minimize the risk of fire in a washer-dryer, the following should be observed:

- Items that have been spotted or soaked with vegetable or cooking oil constitute a fire hazard and should not placed in a washer-dryer. Oil-affected items can ignite spontaneously, especially when exposed to heat sources such as in washer-dryer. The items become warm, causing an oxidation creates heat.

  If the heat cannot escape, the items can become hot enough to catch fire. Piling, stacking or storing oil-affected items can prevent heat from escaping and so create a fire hazard.
- If it is unavoidable that fabrics contain vegetable or cooking oil or have been contaminated by hair care products be placed in washer-dryer, it should first be washed in hot water with extra detergent - this will reduce, but not eliminate the hazard. The “cool down” cycle of washer-dryer is used to reduce the temperature of the items. It should not be removed from the washer-dryer or piled or stacked while hot.
- Items that have been previously cleaned in, washed in, soaked in or spotted with petrol/gasoline, dry-cleaning solvents or other flammable or explosive substances should not be placed in washer-dryer.
- Highly flammable substances commonly used in domestic environments include acetone, denatured alcohol, petrol/gasoline, kerosine, spot removers (some brands), turpentine, waxes and wax removers.
- Items containing foam rubber (also known as latex foam) or similarly textured rubber, like materials should not be dried in a washer-dryer on a heat setting.
- Foam rubber materials can produce fire by spontaneous combustion when heated.
- Fabric softeners or similar products should not be used in a washer-dryer to eliminate the effects of static electricity unless this practice is specifically recommended by the manufacturer of the fabric softener or product.
- Undergarments that contain metal reinforcements should not be placed in a washer-dryer. Damage to the washer-dryer can result if metal reinforcements come loose during drying. When available a drying rack could be used for such itmes.
- Plastic articles such as shower caps or babies’ waterproof napkin covers should not be placed in washer-dryer.

2. PRODUCT DESCRIPTION

2.1 Parts

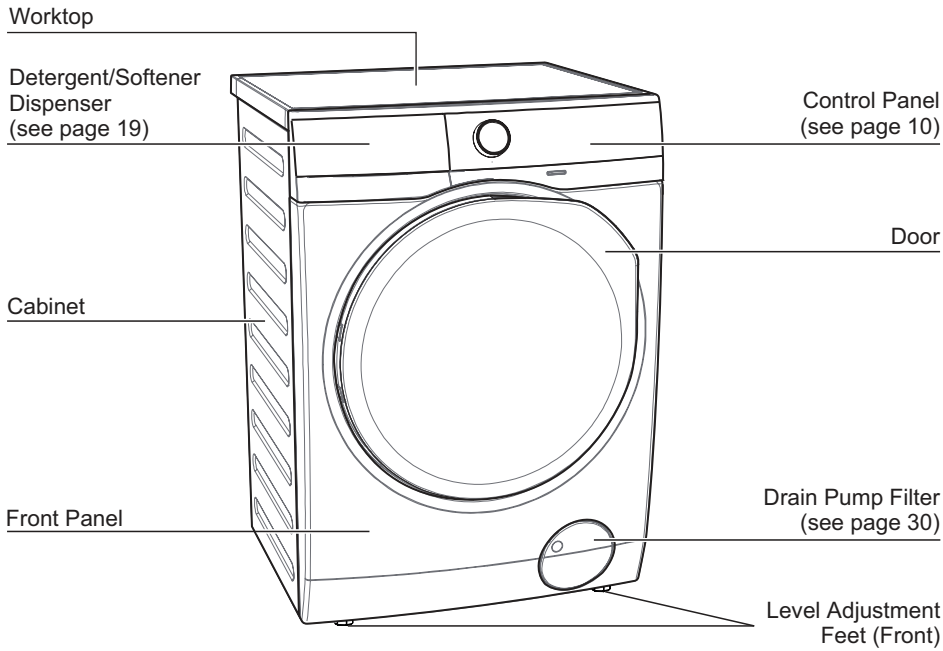

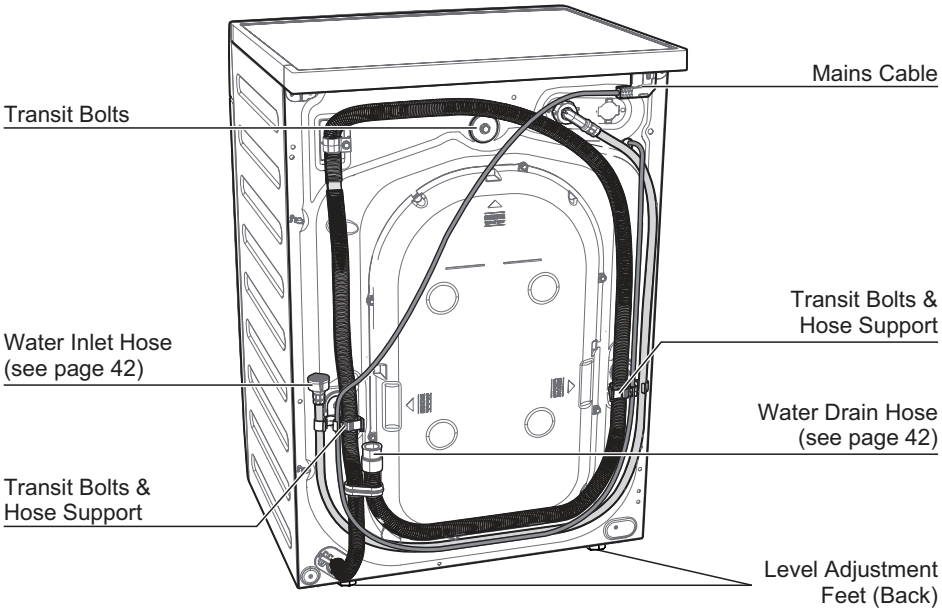

Detergent/Softener Dispenser
(For more informations, see page 19, 29)

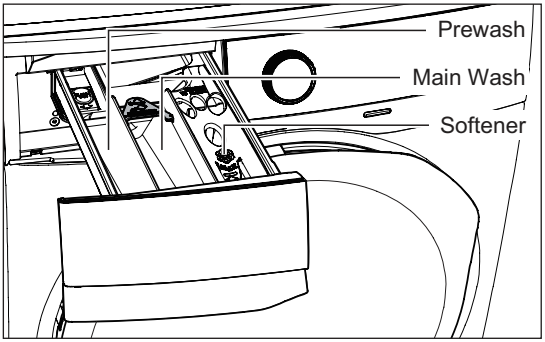

Door (when open)
(for more informations, see page 19)

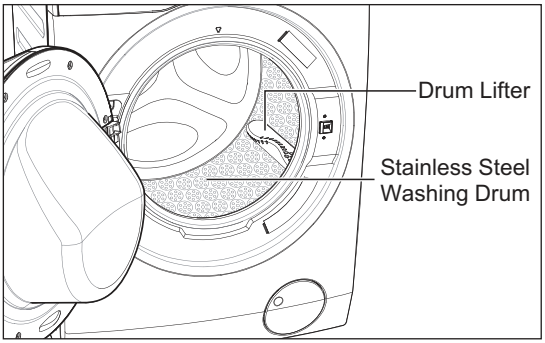

Drain Pump Filter (when open)

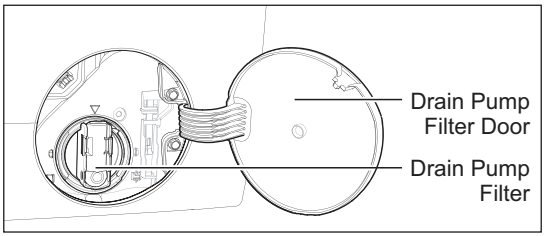

Level Adjustment Feet

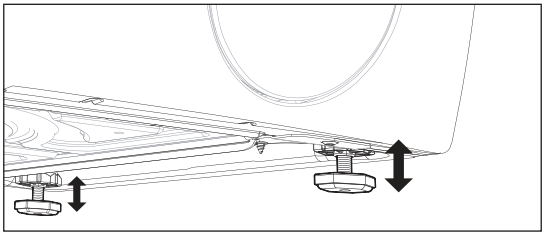

Transit Bolt (when remove)

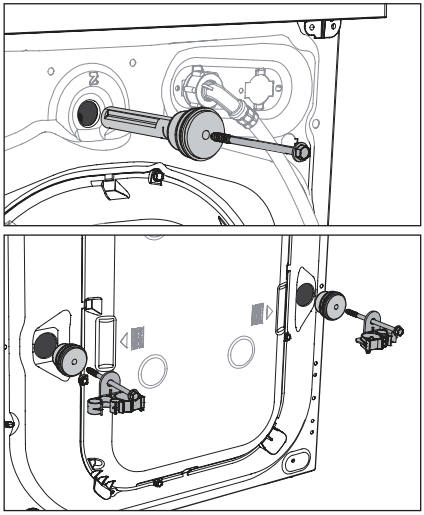

Transit bolts must be removed before using the appliance.

2.2 Accessories

Plastic Caps

To close the holes on the rear side of the cabinet after the removal of the transit bolts.

Plastic Hose Guide

To connect the drain hose on the edge of a sink.

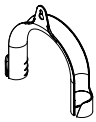

3. CONTROL PANEL

3.1 Control Panel Description

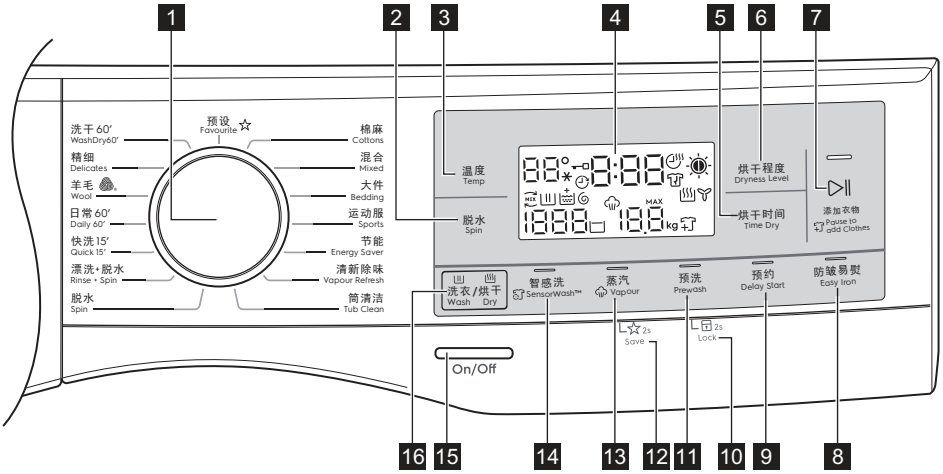

1 Program Selector Knob
2 Spin Selection Touchpad
3 Temperature Selection Touchpad
4 Display
5 Time Dry Touchpad
6 Dryness Level Touchpad
7 Start Pause and Add Clothes Touchpad
8 Easy Iron Touchpad
9 Delay Start Touchpad
10 Child Lock Option
11 Prewash Touchpad
12 Save Favourite Program Option
13 Vapour Touchpad
14 SensorWash Touchpad
15 On Off Button
16 Wash Dry Mode Selection Touchpad

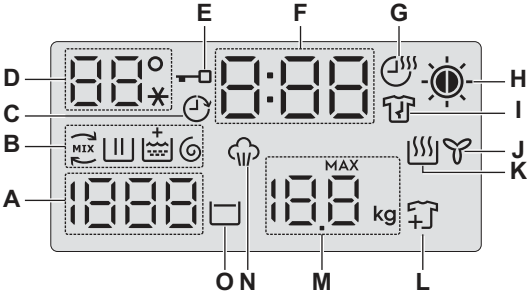

A) Spin Speed
B) Program Phase Indication Icon:
Ultramix Phase
Wash Phase
Rinse Phase
Spin Phase
C) Delay Start Icon
D) Temperature (✳ corresponds to cold wash)

E) Door Lock Icon
F) Program Duration
G) Time Dry Icon
H) Dryness Level Icon
Extra Dry
Cupboard Dry
Iron Dry
I) Anticrease Phase Icon
J) Cooling Phase Icon
K) Drying Phase Icon
L) Add Clothes Icon
M) Maximum Load Capacity Of Selected Program
N) Vapour Phase Icon
O) Rinse Hold Icon

3.2 Program Chart

Program; Temperature range	Max. Spin Speed	Max. Load (Dry Clothes)		Type of load and soil level
		Wash	Dry	
Cottons; Cold to 90°C	1400 rpm	11 kg	7 kg	White and coloured cotton.
Mixed; Cold to 60°C	1200 rpm	4 kg	3 kg	Synthetic or mixed fabric items.
Bedding; Cold to 60°C	800 rpm	3 kg	–	Special program for one synthetic blanket, duvet, bedspread and so on.
Sports; Cold to 40°C	1200 rpm	4 kg	–	A gentle program designed for mixed fabrics found in delicate clothes.
Energy Saver; Cold and 40°C[1)]	1400 rpm	11 kg	7 kg	White and colourfast cotton. Set this program to have a good washing results and decrease the energy consumption. The time of the washing program is extended.
Vapour Refresh	–	1.5 kg	–	This cycle removes odours and helps to dewrinkle the laundry. ℹ Do not add detergent.
Tub Clean; 60°C	–	–	–	For cleaning the tub.
Spin	1400 rpm	11 kg	7 kg	To spin the laundry and drain the water in the drum.
Rinse + Spin	1400 rpm	11 kg	7 kg	To rinse and spin the laundry.
Quick 15; 30°C	800 rpm	1.5 kg	–	Lightly soiled synthetics or mixed fabrics.
Daily 60; 30°C to 60°C	1400 rpm	5.5 kg	4 kg	Coloured cotton e.g. shirts, blouses, towels and undergarments with normal level of soil.
Wool ®; Cold to 40°C	1200 rpm	2 kg	1 kg	Specially tested program for woollen garments bearing the “Pure new woollen, non-shrink, machine washable” label.
Delicates; Cold to 40°C	1200 rpm	4 kg	–	Delicate fabrics such as acrylics, viscose, polyester items.

Program; Temperature range	Max. Spin Speed	Max. Load (Dry Clothes)		Type of load and soil level
		Wash	Dry	
WashDry 60; 30°C, 40°C	1200 rpm	1 kg	1 kg	Non-Stop washing and drying program for 3 - 5 shirts with lightly soil.
Favourite	–	–	–	Recall you favourite program.

1) Energy Saver program with 40degC and 1400rpm is recommended for a full load of normally soiled cottons, and is the Water and Energy rating label program.

Woolmark Apparel Care - Blue

The wool wash cycle of this machine has been approved by The Woolmark Company for the washing of wool garments labelled as “hand wash” provided that the garments are washed according to the instructions issued by the manufacturer of this machine.

Follow the garment care label for drying and other laundry instructions. MXXXX

The Woolmark symbol is a Certification mark in many countries.

3.3 Program Options Compatibility

Program	Option								
	--- No Spin	Rinse Hold	Dryness[2] Level	Time[2] Dry	Easy Iron	Delay Start	Prewash	Vapour[1]	Sensor Wash
Cottons	O	O	O	O	O	O	O	O	O
Mixed	O	O	O [3]	O	O	O	O	O	O
Bedding	O	×	×	×	×	O	×	O	O
Sports	O	O	×	×	×	O	O	×	O
Energy Saver	O	O	O	O	×	O	O	O	×
Vapour Refresh	×	×	×	×	×	O	×	O	×
Tub Clean	–	–	–	–	–	–	–	–	–
Spin	O	×	O	O	×	O	×	×	×
Rinse + Spin	O	O	O	O	×	O	×	×	×
Quick 15	O	O	×	×	×	O	×	×	×
Daily 60	O	O	O	O	×	O	×	×	×
Wool	O	O	×	O	×	O	×	×	×
Delicates	O	O	×	×	×	O	O	O	O
WashDry 60	×	×	×	×	×	O	×	×	×
Favourite	–	–	–	–	–	–	–	–	–

1) Vapour option can be combined with temperature 40°C to 90°C only.

2) Do not select a spin speed LOWER than that proposed by the appliance to avoid a too long drying time so saving energy. In any case the reduction of the spin speed is only possible after selecting drying.

3) This program can select only “Cupboard Dry” option.

3.4 Options

Wash/Dry Mode Touchpad

This touchpad is used to select Program Mode of your machine. Program mode available are :

- Wash Only Mode (default)
- / Wash and Dry Mode
- Dry Only Mode

If a mode is not compatible with program selected, the symbol "– – –" will flash on display along with buzzer sound.

Changing a running program mode **is possible only by switching off** the machine.

Temperature Touchpad

Press this touchpad repeatedly to increase or decrease the wash temperature if you want your laundry to be washed at a temperature different from the one proposed by the Wahser-Dryer.

Spin Selection Touchpad

Press this touchpad repeatedly to increase or decrease the spin speed or select Rinse Hold, if you want your laundry to be spun at a speed different from the one proposed by the Wahser-Dryer.

- **No Spin (– – –)**

  No spin option eliminates all the spin phases and increase the number of rinses.

- **Rinse Hold ( )**

  By selecting this option the water of the last rinse is not emptied out and the drum turns regularly to prevent the laundry creases.

  The door is still locked to indicate that the water must be emptied out.

  The door stays locked with the water in the drum. To continue the cycle, you must press (Start/Pause).

SensorWash™ ( ) Touchpad

Select " SensorWash™ " option to turn ON the sensors for the dirt and detergent residue.

The "SensorWash" is switched ON by default. If you want to turn OFF the sensor press this touchpad once. (Please see the table "Program Options Compatibility" for which programs can be used with this option.)

When using this option, machine will automatically check the dirt level and detergent residue in your laundry. It will automatically adjust the washing time and numbers of rinses according to the load to make sure that your clothes are really clean.

The SensorWash technology consist of 2 different sensors for detection:

1) The 1st Turbidity sensor detects the dirt level at the start of cycle and automatically calculates the actual time needed to remove the level of dirt in the wash; from low dirt levels all the way to the maximum dirt level.

   The initial time displayed on the control panel indicates the time needed for the maximum dirt level.

2) The 2nd Conductivity sensor will check the amount of detergent residue after the first rinse and the machine will calculate the optimum number of rinses (Maximum of 2 additional rinses) needed to make sure that the detergent residue is properly removed.

   Please see details of detergent usage at "Detergents Type and Quantity of Detergent"

Vapour ( ) Touchpad

Select this option to add approximately 30 minutes of tumbling in vapour during the wash cycle. Vapour helps open fabric fibers up to allow laundry additives to release tough stains. The indicator of this option will be on.

- Vapour may not necessarily be visible inside the drum during a vapour wash cycle. Vapour is created below the drum and allowed to naturally rise into the clothes.
- Vapour may not be present during the entire vapour wash cycle.
- Vapour function is more effective with half load.
- At the end of the Vapour cycle, the clothes will be warmer, softer and detached from the drum.

NOTE

If Vapour option is selected, rinse temperatures will be elevated.

During a vapour cycle, you may notice vapour exiting from the drain hose of the Wahser-Dryer, this is normal and there is no cause for alarm.

Prewash Touchpad

Select this option if you wish your laundry to be pre-washed before the main wash. Use this option for heavy soil.
The indicator of this option will be on.

When you set this function, put the detergent into the “ ” compartment. This function increases the program duration.

Delay Start Touchpad

This option makes it possible to delay the start of the program by 30 min, 60 min or 90 min and then by every hour from 2 to 20 hours. The delay you have selected is indicated on the display. The end time will increase in order to show you the selected delay.

You must select this option after you have set the program and before you press the Start/Pause button.

If you wish to add laundry in the machine during the delay time, press Start/Pause touchpad to put the machine in pause mode. Add laundry, close the door and press Start/Pause touchpad again.

You can cancel the delay time at any moment, by pressing “Delay Start” touchpad repeatedly till the display shows delay time “ ”, then press the Start/Pause touchpad.

Easy Iron Touchpad

When selecting this option, the laundry is gently washed and spun to avoid creasing. In this way, ironing is easier. The indicator of this option will be on.

Dryness Level Touchpad

Press this touchpad to set dryness level using auto sensing feature. The display will show the selected option.

- Extra dry
- Cupboard dry
- Iron dry

NOTE

- Dryness level settings are based on wash program selected.
- The final time value is the total duration of the washing + detachment + drying cycles, calculated on a default load size.
- At the end of the program the appliance performs the anti-crease phase for approximately 10 minutes. During this time, the display will show time remaining "End" and door is locked "".

If you wish to open the door during the anti-crease phase or interrupt it, press Start/Pause touchpad.

Dryness Option Guidelines:

Level of dryness	Type of fabric	Load
Extra Dry Ideal for towels or similar	Cotton and linen (bathrobes, bath towels, etc)	up to 7 kg
Cupboard Dry Suitable for items to put away without ironing	Cotton and linen (bathrobes, bath towels, etc)	up to 7 kg
	Synthetics and mixed fabrics (jumpers, blouses, underwear, household linen)	up to 3 kg
Iron Dry Suitable for ironing	Cotton and linen (sheets, tablecloths, shirts, etc.)	up to 7 kg

Time Dry ( ) Touchpad

If you wish to carry out a timed drying program, keep pressing this touchpad until the desired time is reached.

NOTE

- Maximum allowable timed drying changes based on wash program selected.
- The final time value is the total duration of the washing + detachment + drying cycles.
- At the end of the program the appliance performs the anti-crease phase for approximately 10 minutes. During this time, the display will show time remaining "End" and door is locked "".

If you wish to open the door during the anti-crease phase or interrupt it, press Start/Pause touchpad.

Dry Time Option Guidelines:

Type of fabric	Load (kg)	Spin Speed (rpm)	Suggested Times (Hrs)
Cotton and linen (bathrobes, bath towels, etc.).	5 - 7	1400	3 - 4
	3 - 5	1400	2 - 3
	2 - 3	1400	1 - 2
Synthetic or mixed fabric items (jumpers, blouses, underwear, household linen, etc.).	3	1200	2 - 3
	1	1200	1
Wool and hand washable wool.	1	1200	2

Duration of the drying cycle

The drying time can vary according to :

- the final spin speed;
- dryness level (Extra Dry or Cupboard Dry or Iron Dry);
- the type of laundry;
- the size of load.

Fibre residue

After drying fluffy fabrics, such as new towels, it is advisable to perform a Rinse program to ensure that any residue that may remain in the tub is completely removed and does not stick to garments dried afterwards. After each drying cycle, clean the drain pump filter. Please refer to care and cleaning in section 11 "CARE AND CLEANING".

Additional drying

Should the laundry still be too wet at the end of the program, set another short drying cycle.

- The final part of a washer- dryer cycle occurs without heat (cool down cycle). This ensures the laundry will be left at a low temperature.
- **WARNING!**

  To prevent the formation of creases or shrinking of fabrics, avoid excessive drying.

3.5 Settings

Save Favourite (☆) Program

Program settings that are frequently used can be saved (e.g. Cotton, 60°C, 1200 rpm, with Prewash and Vapour).

To program/re-program Favourite with your own selections and save them, proceed as follows:

1. Put machine in Stand-By mode.
2. Select your desired program settings.
3. To save favourite program, press and hold “Vapour ” touchpad about 2 seconds and you will hear “Bip, Bip” sound and “Favourite” LED is flashing.

To recall the favourite wash program, turn selector knob to “Favourite ☆” program. You will get acknowledgement on the screen when the Favourite program is loaded.

Child Safety Lock ( ) Option

Your appliance is provided with CHILD SAFETY LOCK which permits you to leave the appliance unsupervised with the door closed without having to worry that children might be injured by or cause damage to the appliance.

Set this option after pressing the Start/Pause touchpad.

To set “Child Lock” option:

- To activate the function, press and hold “Prewash” touchpad about 2 seconds until the display shows the icon “ LOC ”.

  If you press any touchpad while Child Lock is activated, the icon “ LOC ” will flash on display 3 times along with buzzer sound.

  The touchpads are locked (except for the On/Off button).

  This function remains enabled even after the appliance is switched off.

- To deactivate the function, press and hold “Prewash” touchpad about 2 seconds until the display shows the icon “ unL ”.

Enabling/Disabling End-Of-Wash Buzzer

This setting permits you to either enable or disable the buzzer at the end of the program. As an example, you might wish to disable this buzzer when you start a wash when going to bed, so that when the wash finished approximately 1 hour later, it will not disturb you through the night.

Error warning beeps such as critical faults are not disabled.

- To disable the buzzer sound, press “SensorWash ( )” and “Vapour ( )” touchpads at the same time about 3 seconds, the icon “ bOF ” will show on display along with buzzer sound.
- To return to default configuration press these 2 touchpads at the same time about 3 seconds, the icon “ bOn ” will show on display along with buzzer sound.

3.6 Start/Pause (▷‖) and Add Clothes ( ) Touchpad

This touchpad has 2 functions:

1. Start/Pause (▷‖)

After you have selected the desired program and options, press this touchpad to start the machine. The Start/Pause pilot light will stop flashing and remain lit until the water level is above the bottom edge of the door then pilot light goes OFF.

If you have selected a “Delay Start” option, the countdown will begin and will be shown on the display.

To interrupt a program which is running, press this touchpad to pause the machine, the Start/Pause pilot light flashes.

To restart the program from the point at which it was interrupted, press this touchpad again, the Start/Pause pilot light will stop flashing.

2. Add Clothes ( )

You can only add clothes when the icon “ ” shown on the display.

To add clothes:

1. Pressing the “Start/Pause” touchpad to pause the program.
2. Wait for the machine to come to a complete stop before opening the door (wait for door lock “ ” icon to turn off).
3. Add clothing and close the door.
4. Resume the program by pressing “Start/Pause” touchpad again.

4. BEFORE FIRST USE

NOTE

During installation or before first use you may observe some water in the machine. This is a residual water left in the machine after a full functional test in the factory to ensure the machine is delivered to customers in perfect working order and is no cause for concern.

1. Ensure that the electrical and water connections comply with the installation instructions.
2. Put 2 litres of water in the detergent compartment for washing phase. This activates the drain system.

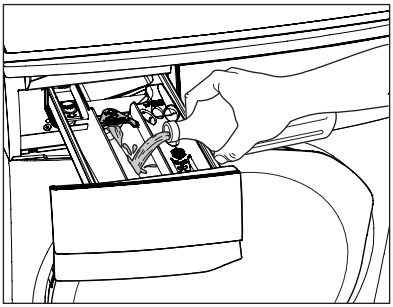

3. Select a Cottons cycle at 90 °C, without any laundry in the machine, to remove any manufacturing residue from the drum and tub then start the machine.

5. DAILY USE - WASHING (Only)

5.1 Loading The Laundry

1. Turn the water tap on.
2. Connect the main plug to the main socket.
3. Press the On/Off button to turn on the Wahser-Dryer. Turn the knob to set a program. The Wahser-Dryer will propose a temperature and automatically select the spin value provided for the program you have chosen.

   The selector knob can be turned either clockwise or counter-clockwise.
4. Check and remove objects (if there are any) that could be trapped in the fold.

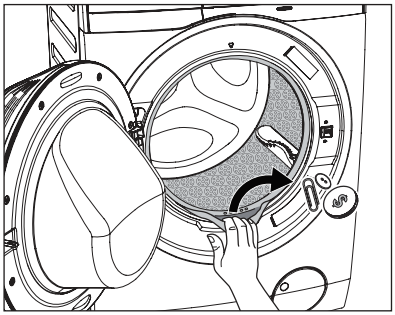

5. Place the laundry in the drum, one item at a time, shaking them out as much as possible. (Refer to page 25 “WASHING HINTS”)
6. Close the door.

   Make sure that no laundry remains between the seal and the door.

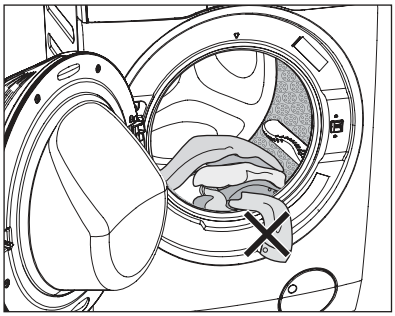

5.2 Using Detergent And Additives

Please read “Detergents Type and Quantity of Detergent”on page 26 before use.

1. Detergent Dispenser Drawer

   The detergent dispenser is divided into three compartments.

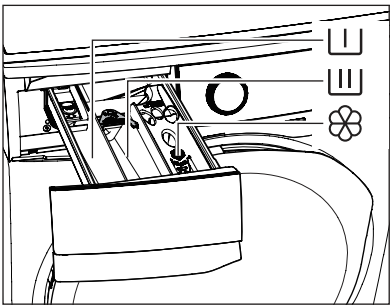

- Compartment “PREWASH”

  This compartment is only used for detergent when a “Prewash” option is selected.

- Compartment “MAIN WASH”

  This compartment is used for detergent on all programs.

  Detergent flap

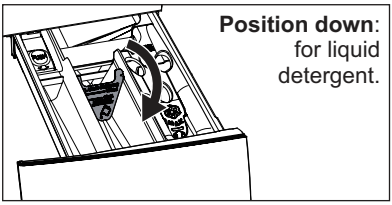

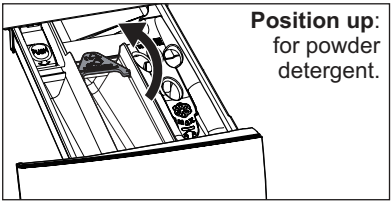

- Compartment “SOFTENER”

  This compartment is used for fabric conditioner and starching agent.

When you use the liquid detergent

- Do not use gelatinous or thick liquid detergents.
- Do not put more liquid than the maximum level.
- Do not set the “Prewash” phase.
- Do not set the “Delay Start”.

2. Measure out the detergent and the fabric softener;
   - Pull out the dispenser drawer until it stops.
   - Measure out the amount of detergent required, pour it into the main wash compartment [II].

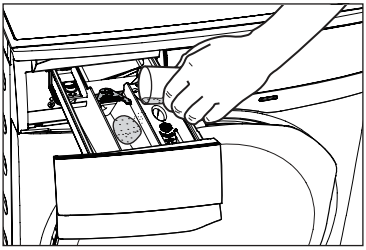

   - If you wish to carry out the “Prewash” phase, pour it into the compartment marked [I].

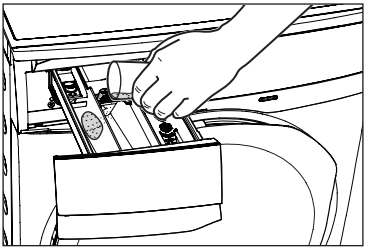

   - If required, pour fabric softener into the compartment marked ❀ .

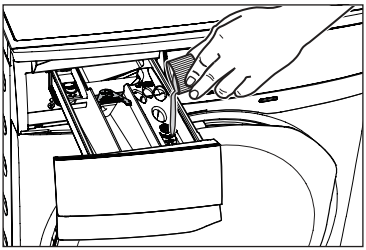

   - Close the drawer gently.

NOTE

The softener amount used must not exceed the “MAX” mark in the drawer.

If you use thick softeners it is recommended to dilute with water.

NOTE

Residues of detergent, softener and water may remain in the dispenser. It is recommended to clean the dispenser regularly to remove any residue.

5.3 Options Setting

1. If you want your laundry to be spun or use temperature different from the one proposed by the Wahser-Dryer, press “Spin” and “Temp” touchpads repeatedly to change the spin speed and temperature.

   Press the option touchpads, if you want your laundry to be washed with special functions.

   NOTE

   - Different functions can be combined which is dependent on the program selected.
   - If an option is not compatible with the program selected, the symbol “– – –” will flash on display along with buzzer sound.

2. If you want to delay the start of the program, press the “Delay Start” touchpad repeatedly to choose your Wahser-Dryer delay time.

5.4 Starting A Cycle (▷||)

To start a program, press the Start/Pause touchpad. The corresponding pilot light will stop flashing and a default program duration will be displayed on the screen.

After approx. 15 minutes from the start of a program:

- The appliance will automatically adjust the selected program duration according to the type and size of the load.
- The display will show adjusted program duration.

NOTE

If you press any touchpad while a program is operating, the symbol “- - - ” will flash on display along with buzzer sound. (except Start/Pause touchpad and On/Off button)

5.5 Interruption Of A Program

- To pause, press Start/ Pause. The indicator will start flashing.
- Press the Start/Pause again. The program will continue.

5.6 Changing A Program

Changing a running program **is possible only by switching off** the appliance.

- Press the “On/Off” button to cancel the program and to turn off the appliance.
- Press the “On/Off” button again to start the appliance.

Now you can set a new wash program and change any available options. Press Start/Pause to start the new program.

NOTE

The appliance will not drain the water (except programs; Vapour Refresh, Spin, Rinse + Spin).

5.7 Changing The Options

It may be possible to change some of the options after a program has started.

1. Press the touchpad Start/Pause. The indicator will start flashing.
2. If available change the options that you wish.
3. Press Start/Pause again. The program will continue.

5.8 Opening The Door

While a program or the Delay Start is operating, the appliance door is locked and the display shows the indicator “ ”. First, set the machine to PAUSE by pressing the “Start/Pause” touchpad. Wait until the door lock indicator goes off, then the door can be opened.

If the door lock indicator “ ” does not disappear, this means that the machine is already heating and the water level is above the bottom edge of the door or the drum is turning. In this case the door CAN NOT be opened. If you need to open it, you must drain the water to open the door.

In case of emergency please refer to “Emergency door opening” on page 38.

5.9 At The End Of The Program

- The appliance stops automatically.
- The acoustic signal will operate.
- The display will show “ End ”.
- The indicator of the touchpad Start/Pause goes off.
- The door lock indicator “ ” goes off.
- Remove the laundry from the appliance. Make sure that the drum is empty.
- Keep the door partly open, to prevent the mildew and odours.
- Turn off the water tap.

NOTE

At the end of the program, the time remaining can suddenly decrease from 7 minutes or less to 0 due to the overestimated total program time during the load sensing phase. In some cases (with perfectly balanced load) the program time can be shorter than the time estimated after the load sensing phase is completed. This is a normal behavior of the machine and not a cause for concern as it does not compromise its performance.

5.10 When The Washing Program Is Completed, But There Is Water In The Drum

(Option “Rinse Hold ” is used)

- The drum turns regularly to prevent the creases in the laundry.
- The indicator “Start/Pause” flashes to remind you to drain the water.
- The door lock indicator “ ” is on. The door stays locked.

You must drain the water to open the door.

To drain the water:

1. Press the “Start/Pause ▷II” touchpad. The appliance drains the water and spins with the maximum spin speed for selected program.

   Alternatively, before pressing the “Start/Pause” touchpad, you can press the “Spin ” touchpad to change the spin speed. You can select “No Spin (– – –)”, if you want the machine to only drain the water.

2. When the program is completed and the door lock indicator “ ” goes off, you can open the door.
3. Press the “On/Off” button to deactivate the appliance.

NOTE

After approximately 18 hours, if you do not press Start/Pause touchpad, the appliance will drain and spin automatically (except for “Wool” program) .

5.11 AUTO Off Mode

The AUTO Off mode automatically deactivates the appliance to decrease the energy consumption when:

- You do not press any buttons for 5 minutes before you press “Start/Pause”.
  - Press the “On/Off” button to activate the appliance again.
- After 5 minutes from the end of the washing program.
  - Press the “On/Off” button to reactivate the appliance. Display will show the end of the last wash.
  - Press any touchpad again to show the last wash program.

6. DAILY USE - DRYING (Only)

1. Press the On/Off button to turn on the machine.

   The water tap must be open and the drain hose must be positioned in the sink or connected to the drain pipe.

2. Load the laundry. Make sure the load size does not exceed the maximum drying capacity of the machine.
3. Turn the knob to set a wash program which can select drying option (refer to Program Chart on page 11), according to your clothes then press **Wash/Dry Mode** touchpad to switch your machine to **Dry Only ( ) mode**.
4. If you wish to select an automatic drying, press the “Dryness Level” option until the icon corresponding to the required dryness level appears on the display. (see page 15)
5. If you wish to select a timed drying, press the “Time Dry ” option repeatedly until desired drying time reached. (see page 16)
6. Press “Start/Pause ” touchpad to start the program. The time remaining is updated every minute.
7. At the end of the program :
   - The acoustic signal will operate.
   - The display will show “End” and “Anti Crease ( )” icon is lit.
   - The door lock indicator “ ” is still on.
   - The appliance will perform the anti-crease phase for approximately 10 minutes.

     After anti-crease phase finish, the door lock indicator “ ” goes off. The display will show “ End ”.

     If you wish to open the door during the anti-crease phase or interrupt it, press Start/Pause touchpad.

8. Press “On/Off” button to switch the machine off.
9. At the end of each drying cycle, the temperature of your clothing will be high. For your safety, please leave the door open to let your clothes cool before removing your laundry.

7. DAILY USE - WASHING & DRYING (Non-Stop Program)

7.1 Wash n ro ram Dryness e el O on

1. Load the laundry and add detergent and fabric softener. Make sure the load size does not exceed the maximum drying capacity of the machine.
2. Turn the knob to set a wash program which can select drying option (refer to Program Chart on page 11), according to your clothes then press **Wash/Dry Mode** touchpad to switch your machine to **Wash and Dry (/) mode**.
3. Select the required options by pressing the relevant touchpads. If possible, do not select a spin speed lower than that proposed by the machine to avoid unnecessary longer drying time therefore saving energy.
4. Set the dryness level by pressing “**Dryness e el** touchpad. The display will then show the whole duration of wash & dry cycle.

   If a program is not compatible with the drying option selected, the symbol “ – – – ” will flash on display.

5. Start the program by pressing Start/Pause touchpad. The time remaining is updated every minute on the display.

6. At the end of the program press the On/Off button to switch the machine off.

   At the end of each drying cycle, the temperature of your clothing will be high. For your safety, please leave the door open to let your clothes cool before removing your laundry.

NOTE

- If you wish to open the door during the anti-crease phase or interrupt it, press Start/Pause touchpad.
- Some drying level options are not available for some programs.
- When “Iron Dry ” option is selected, the display time will be adjusted after approximately 15 minutes from the start of the program, based on the laundry type and load size.

  The display will show the new adjusted time.
- When “Extra Dry ” or “Cupboard Dry ” is selected the display time will be adjusted towards the end of the drying cycle when machine senses required dryness level has been achieved. In case of laundry quantity lower than maximum load capacity, the time remaining can suddenly decrease from e.g. approximately 50 minutes to 0.

7.2 Washing Program + “Time Dry ” Option

1. Load the laundry and add detergent and fabric softener. Make sure the load size does not exceed the maximum drying capacity of the machine.
2. Turn the knob to set a wash program which can select drying option (refer to Program Chart on page 11), according to your clothes then press **Wash/Dry Mode** touchpad to switch your machine to **Wash and Dry (/) mode**.
3. Select the required options by pressing the relevant touchpads. If possible, do not select a spin speed lower than that proposed by the machine to avoid unnecessary longer drying time therefore saving energy.
4. Set the drying time by pressing “Time Dry ” touchpad repeatedly until desired drying time reached. The display will then show the whole duration of wash & dry cycle.

   If a program is not compatible with the drying option selected, the symbol “ – – – ” will flash on display.
5. Start the program by pressing Start/Pause touchpad. The time remaining is updated every minute on the display.
6. At the end of the program press the On/Off button to switch the machine off.

   At the end of each drying cycle, the temperature of your clothing will be high. For your safety, please leave the door open to let your clothes cool before removing your laundry.

NOTE

- If you wish to open the door during the anti-crease phase or interrupt it, press Start/Pause touchpad.
- If you set only 10 minutes of drying, the appliance performs only a Cooling ( ) phase.

8. WASHING HINTS

8.1 Sorting The Laundry

Follow the wash code symbols on each garment label and the manufacturer's washing instructions. Sort the laundry as follows: whites, coloureds, synthetics, delicates, woollens.

8.2 Temperatures

Temp	Soil level
90°C	For normally soiled white cottons and linen (e.g. teacloths, towels, tablecloths, sheets...).
60°C 50°C	For normally soiled, colourfast garments (e.g. shirts, night dresses, pajamas....) in linen, cotton or synthetic fibres and for lightly soiled white cotton (e.g.underwear).
40°C 30°C Cold	For delicate items (e.g. net curtains), mixed laundry including synthetic fibres and woollens bearing the label pure new wool, machine washable, non-shrink.

8.3 Before Loading The Laundry

- Make sure that no metal objects are left in the laundry (e.g. coin, hair clips, safety pins, pins).

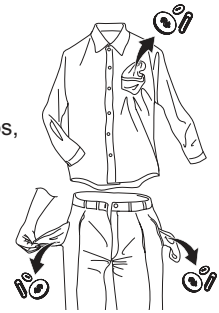

- Button up pillowcases, close zip fasteners, hooks and poppers. Tie any belts or long tapes.

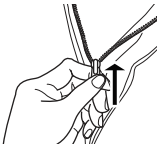

- Wash bras, pantyhose and other delicates in a mesh laundry bag, which you can purchase from your supermarket.

- Make sure that you wash lint collectors separately from lint producers.
- Never wash whites and coloured fabrics together. Whites may lose their "whiteness" in the wash.
- New coloured items may run in the first wash; they should therefore be washed separately the first time.
- Remove persistent stains before washing.
- Rub particularly soiled areas with a special detergent or detergent paste. Treat curtains with special care. Remove hooks or tie them up in a bag or a net.

8.4 Maximum Loads

Recommended loads are indicated in the program charts on page 11.

General rules:

Clothes Load	Quantity
Cotton, linen	drum full but not too tightly packed;
Synthetics	drum no more than half full;
Delicate fabrics and woollens	drum no more than one third full.

Washing a maximum load makes the most efficient use of water and energy. For heavily soiled laundry, reduce the load size.

8.5 Removing Stains

Stubborn stains may not be removed by just water and detergent. It is therefore advisable to treat them prior to washing.

Blood: treat fresh stains with cold water. For dried stains, soak overnight in water with a special detergent then rub in the soap and water.

Oil based paint: moisten with benzine stain remover, lay the garment on a soft cloth and dab the stain; treat several times.

Dried grease stains: moisten with turpentine, lay the garment on a soft surface and dab the stain with the fingertips and a cotton cloth.

Rust: oxalic acid dissolved in hot water or a rust removing product used in cold water. Be careful with rust stains which are not recent since the cellulose structure will already have been damaged and the fabric tends to hole.

Mould stains: treat with bleach, rinse well (whites and fast coloureds only).

Grass: soap lightly and treat with bleach (whites and fast coloureds only).

Ball point pen and glue: moisten with acetone (*), lay the garment on a soft cloth and dab the stain.

Lipstick: moisten with acetone (*) as above, then treat stains with methylated spirits. Remove any residual marks from white fabrics with bleach.

Red wine: soak in water and detergent, rinse and treat with acetic or citric acid, then rinse. Treat any residual marks with bleach.

Ink: depending on the type of ink, moisten the fabric first with acetone (*), then with acetic acid; treat any residual marks on white fabrics with bleach and then rinse thoroughly.

Tar stains: first treat with stain remover, methylated spirits or benzine, then rub with detergent paste.

(*) do not use acetone on artificial silk.

8.6 Detergents Type And Quantity Of Detergent

Low sudsing detergent is required for this Wahser-Dryer to prevent oversudsing problems, unsatisfactory washing result and harm to the machine.

Low sudsing detergents designed for front load washing machines are labelled “Front Loading”, “high efficiency”, “HE”, such as Cold Power for Front Loaders or “Matic”.

Do not use wrong types of detergent, such as Top Loading, Handwash detergent or Soap-Based products in your frontload Wahser-Dryer. This can result in excessive suds, longer cycle time, low spin speeds, poor rinsing and overloading of the motor.

Quantity of detergent to be used

The choice of detergent and use of correct quantities not only affects your wash performance, but also helps to avoid waste and protect the environment. Although biodegradable detergents contain substances which in large quantities can upset the delicate balance of nature.

The choice and quantity of detergent will depend on ;

- type of fabric (delicates, woollens, cottons, etc.) ;
- the colour of clothes ;
- size of the load ;
- degree of soil ;
- wash temperature ; and
- hardness of the water used.

Water hardness is classified by so-called “degrees” of hardness.

Information on hardness of the water in your area can be obtained from the relevant water supply company, or from your local authority.

You may have to try using the detergent quantity as per manufacturers’ instructions then compare the wash result to the list below and adjust the amount of detergent for your future washes accordingly.

Not enough detergent causes:

- the washload to turn grey,
- greasy clothes.

Too much detergent causes:

- oversudsing,
- reduced washing effect,
- inadequate rinsing.

Use less detergent if:

- you are washing a small load,
- the laundry is lightly soiled,
- large amounts of foam during washing.

9. DRYING HINTS

9.1 Preparing The Drying Cycle

As a dryer, the appliance works on condensation principle.

Therefore, the water tap must be open and the drain hose must drain water into a sink or into the drain pipe, even during the drying cycle.

ATTENTION!

Before starting the drying program. Make sure the load size does not exceed the maximum drying capacity of the machine. In order to obtain good performances. (Refer page 11)

9.2 Laundry Not Suitable For Drying

- Particularly delicate items such as synthetic curtains, woollen and silk, garments with metal inserts, nylon stockings, bulky garments such as anoraks, bed covers, quilts, sleeping bags and duvets must not be machine dried.
- Avoid drying dark clothes with light coloured fluffy items such as towels as these can attract fluff.
- Remove the laundry when the appliance has finished drying.
- To avoid a static charge when drying is completed, use either a fabric softener when you are washing the laundry or a fabric conditioner specifically for tumble dryers.
- Garments padded with foam-rubber or materials similar to foam-rubber must not be machine dried; they represent a fire hazard.
- Also, fabrics containing residue of setting lotions or hair sprays, nail solvents or similar solutions must not be machine dried to avoid formation of harmful vapours.

The detergent and any additives must be placed in the appropriate compartments of the dispenser drawer before starting the wash program.

If using liquid detergents, a program without prewash must be selected.

9.3 Garment Labels

For drying, follow the indications given on the manufacturer's labels:

= May be tumble dried
= Drying at high temperature
= Drying at reduced temperature
= Do not tumble dry.

9.4 Drying Cycle Duration

The drying time may vary depending on:

- speed of the final spin;
- dryness level required (Extra dry, Cupboard dry, Iron dry);
- type of laundry;
- weight of the load.

The average drying time for a timed drying are indicated in the "Time Dry " option (see page 16). The experience will help you to dry your laundry in a more suitable way according to the different fabrics.

9.5 Additional Drying

If the laundry is still damp at the end of the drying program, select a short drying cycle again.

WARNING!

Do not over dry the laundry in order to avoid creasing of fabrics or garments shrinking.

10. INTERNATIONAL WASH CODE SYMBOLS

These symbols appear on fabric labels, in order to help you choose the best way to treat your laundry.

Energetic wash **Delicate wash**	Max. wash temperature 95 °C	Max. wash temperature 60 °C	Max. wash temperature 40 °C	Max. wash temperature 30 °C	Hand wash	DO NOT wash at all
Bleaching	Bleach in cold water			DO NOT bleach		
Ironing	Hot iron max. 200 °C	Warm iron max. 150 °C		Lukewarm iron max. 110 °C	DO NOT iron	
Dry cleaning	Dry cleaning in all solvents	Dry cleaning in perchlorethylene, petrol, pure alcohol, R 111 & R 113		Dry cleaning in petrol, pure alcohol and R 113	DO NOT dry clean	
Drying	Flat	On the line	On clothes hanger	High temperature Low temperature Tumble dry	DO NOT tumble dry	

11. CARE AND CLEANING

WARNING!

You must DISCONNECT the appliance from the electricity supply, before you can carry out any cleaning or maintenance work.

11.1 External Cleaning

Clean the appliance only with soap and warm water. Fully dry all the surfaces.

CAUTION!

Do not use alcohol, solvents or chemical products.

11.2 Descaling

The water we use normally contains lime. It is a good idea to periodically use a water softening powder in the machine.

Do this separately from any laundry washing, and according to the softening powder manufacturer's instructions.

This will help to prevent the formation of lime deposits.

11.3 After Each Wash

Leave the door open for a while. This helps to prevent mould and stagnant smells forming inside the appliance.

Keeping the door open after a wash will also help to preserve the door seal.

11.4 Maintenance Wash With “Tub Clean” Program

With the use of low temperature washes it is possible to get a build up of residues inside the drum.

We recommend to use “Tub Clean” program to clean the drum regularly to remove any residue.

To run a maintenance wash:

- The drum should be empty of laundry.
- Select the “Tub Clean” program.
- Press Start/Pause to start the program.

11.5 Cleaning The Dispenser Drawer

The washing powder and additive dispenser drawer should be cleaned regularly.

Remove the drawer by pressing the catch downwards and by pulling it out.

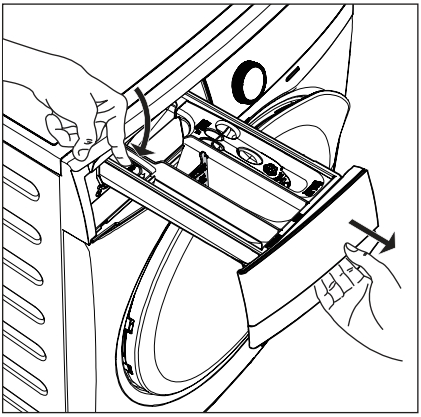

To aid cleaning, the top part of the additive compartment should be removed.

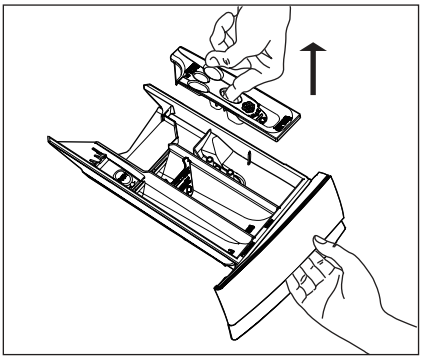

Flush it out under a tap to remove any traces of accumulated powder.

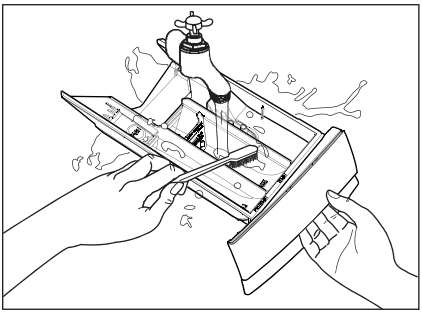

11.6 Cleaning The Drawer Recess

Having removed the drawer, use a small brush to clean the recess, ensuring that all washing powder residue is removed from the upper and lower part of the recess. Replace the drawer and run the rinse program without any clothes in the drum.

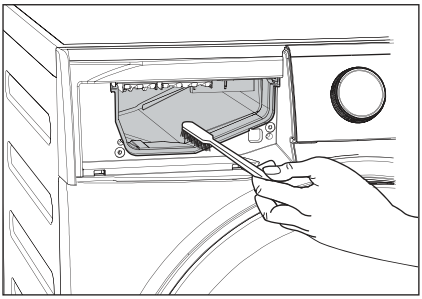

11.7 Cleaning The Pump

Regularly examine the drain pump and make sure that it is clean.

Clean the pump if:

- The appliance does not drain the water.
- The drum cannot turn.
- The appliance makes an unusual noise because of the blockage of the drain pump.
- The display shows an alarm code because of the problem with water drain.

WARNING!

1. Disconnect the mains plug from the mains socket.
2. Do not remove the filter while the appliance is operating. Do not clean the drain pump if the water in the appliance is hot. The water must be cold before you clean the drain pump.

To clean the drain pump:

1. Open the drain pump door.

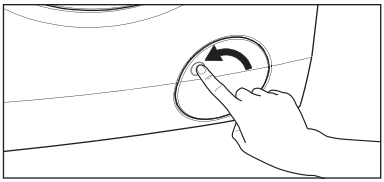

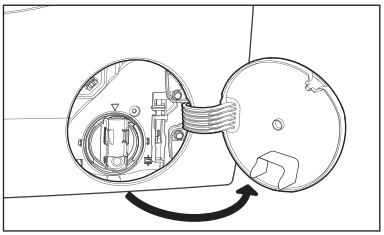

2. Place a suitable water container below the recess of the drain pump to collect the water that flows out.

   Press the two levers and pull forward the drainage duct to let the water flow out.

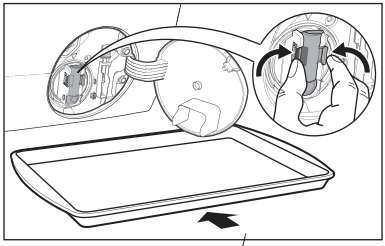

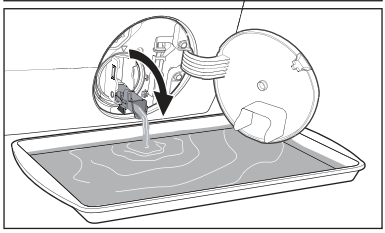

3. When the container is full of water, put the drainage duct back again and empty the container. Do step 2, 3 again and again until no more water flows out from the drain pump.

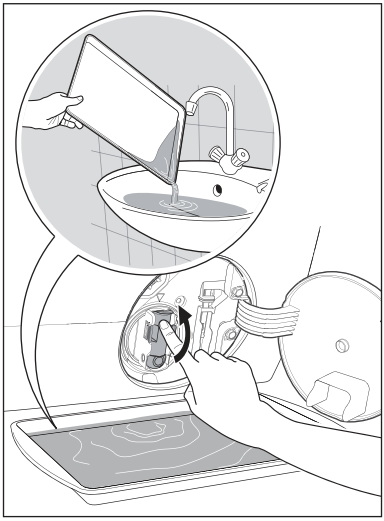

4. Push back the drainage duct and turn the filter counter-clockwise to remove it.

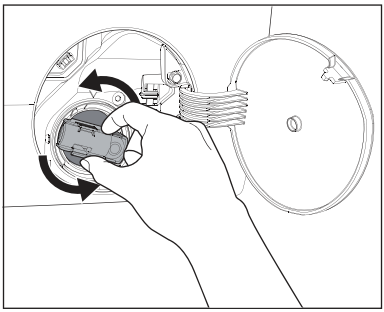

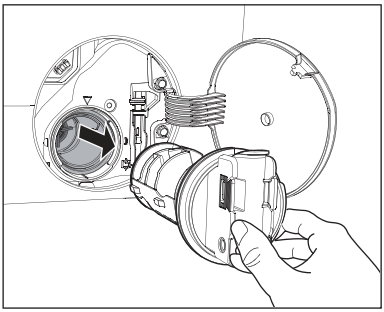

5. Remove fluff and objects from the pump (if there are any).

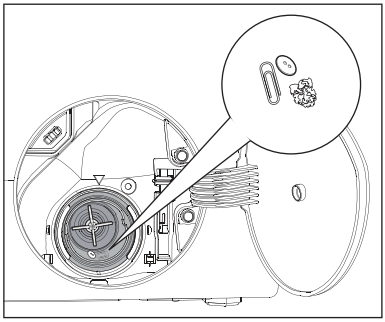

6. Make sure that the impeller of the pump can turn. If this does not occur, contact the service centre.

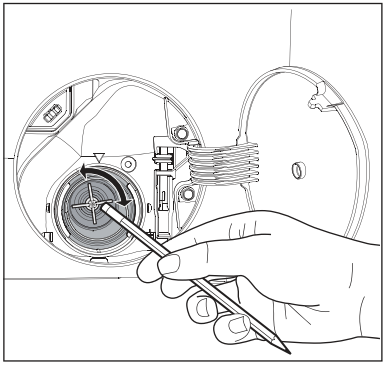

7. Clean the filter under the water tap.

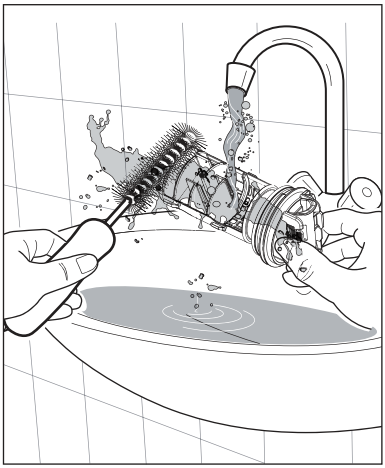

8. Put the filter back into the housing with exposed section facing up. Make sure that you correctly tighten the filter to prevent leakages.

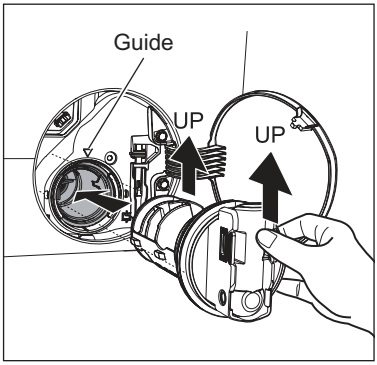

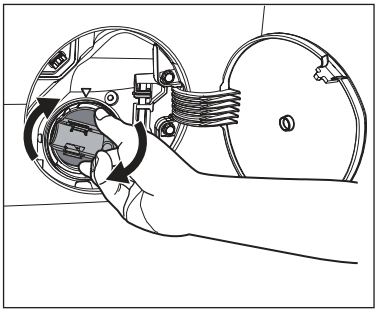

9. Close the drain pump door.

11.8 Cleaning The Water Inlet Filter

If your water is very hard or contains traces of lime deposit, the water inlet filter may become clogged. It is therefore a good idea to clean it from time to time.

To clean the water inlet filters:

1. Close the water tap.
2. Remove the water inlet hose from the water tap.
3. Clean the filter in the inlet hose with a stiff brush.

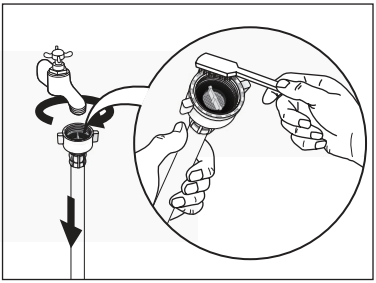

4. Remove the inlet hose behind the appliance.

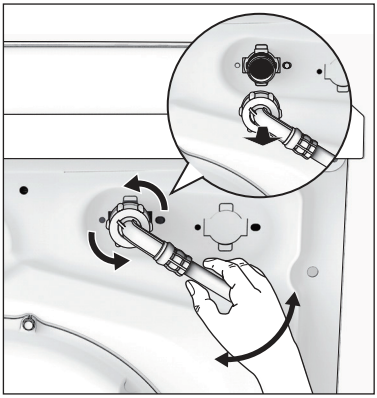

5. Clean the filter in the valve with a stiff brush or a towel.

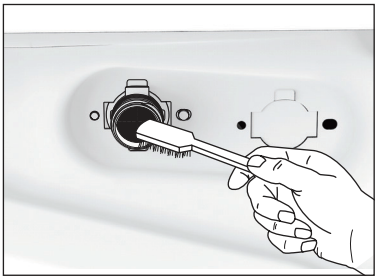

6. Install the inlet hose again. Make sure that the couplings are tight to prevent leakages.
7. Open the water tap.

11.9 Frost Precautions

If the appliance is installed in an area where the temperature can be less than 0 °C, remove the remaining water from the inlet hose and the drain pump.

Emergency Drain

1. Disconnect the main plug from the main socket. Turn off the water tap.
2. Remove the water inlet hose.
3. Remove the drain hose from the rear support and unhook it from sink or spigot.

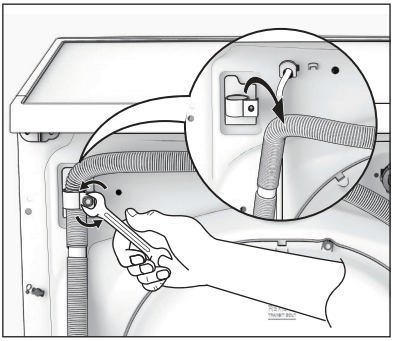

4. Put the end of the drain and inlet hose in a container. Let the water flow out of the hoses.

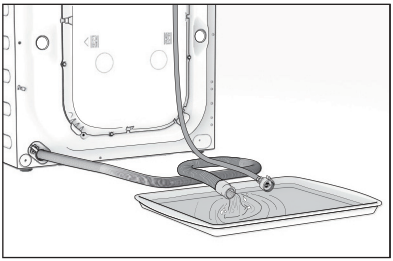

5. When no more water flows, install the inlet hose and the drain hose again.

NOTE

Make sure that the temperature is more than 0 °C before you use the appliance again.

12. TROUBLESHOOTING

12.1 Possible Failures

Certain problems are due to lack of simple maintenance or oversights, which can be solved easily without calling out an engineer.
Before contacting your local Service Centre, please check troubleshooting.

Once the problem has been eliminated, press the Start/Pause button to restart the program. If after all checks, the problem persists, contact your local Service Centre.

WARNING! Deactivate the appliance before you do the checks.

Alarm Code:

E 10	The appliance does not fill with water properly.
E 20	The appliance does not drain the water.
E 40	The appliance door is open or not closed correctly. Please check the door!
E H0	The main supply is unstable. Wait until the main supply is stable.
E 9 1	No communication between electronic elements of the appliance. Switch off and switch on again.

Malfunction	Possible cause	Solution
Machine does not start:	The door has not been closed. (Error code: E 40)	Close the door firmly.
	The plug is not properly inserted into the power socket.	Insert the plug into the power socket.
	There is no power at the socket.	Please check your domestic electrical installation.
	The Start/Pause touchpad has not been pressed.	Press the Start/Pause touchpad.
	The “Delay Start” has been selected.	If the laundry are to be washed immediately, cancel the “Delay Start”.
	The Main supply is unstable. (If E H0 appears on the display.)	Wait until the main supply is stable. Appliance will start automatically.
Machine does not fill the water:	The water tap is closed. (Error code: E 10)	Open the water tap.
	The inlet hose is squashed or kinked. (Error code: E 10)	Check the inlet hose connection.
	The filter in the inlet hose is blocked. (Error code: E 10)	Clean the water inlet hose filter.
	The door is not properly closed. (Error code: E 40)	Close the door firmly.
Machine fills then empties immediately:	The end of the drain hose is too low. (Error code: E 10)	Refer to relevant paragraph in “water drainage” section.

Malfunction	Possible cause	Solution
Machine does not empty and/or does not spin:	The drain hose is squashed or kinked. (Error code: E20)	Check the drain hose connection.
	The drain pump is clogged. (Error code: E20)	Clean the drain filter.
	The option “Rinse Hold” has been selected.	Press Start/Pause touchpad to drain the water or select spin program.
	The laundry is not evenly distributed in the drum.	Pause the machine and redistribute laundry manually.
There is water on the floor:	Too much detergent or unsuitable detergent (creates too much foam) has been used.	Reduce detergent quantity and use correct type of detergent (refer page 26).
	Check whether there are any leaks from one of the inlet hose fittings. It is not always easy to see this as the water runs down the hose; check to see if it is damp.	Check the water inlet hose connection.
	The drain hose is damaged.	Call Service.
Unsatisfac-tory washing results:	Too little detergent or unsuitable detergent has been used.	Increase detergent quantity or use different detergent (refer page 26).
	Stubborn stains have not been treated prior to washing.	Use commercial products to treat the stubborn stains.
	The correct temperature was not selected.	Check if you have selected the correct temperature.
	Excessive laundry load.	Reduce load.
The door will not open:	The program is still running.	Wait until the end of cycle.
	There is water in the drum.	You must drain the water to open the door (refer “Opening The Door” on page 21.
	This problem may be caused by a failure of the appliance.	Contact Service. If you need to open the door, please read carefully “Emergency door opening” on page 38.
Machine vibrates or is noisy:	The transit bolts and packing have not been removed.	Check the correct installa-tion of the appliance.
	The support feet have not been adjusted.	Check the correct levelling of the appliance.

Malfunction	Possible cause	Solution
Machine vibrates or is noisy:	The laundry is not evenly distributed in the drum.	Pause the machine and redistribute laundry manually.
	There is very little laundry in the drum.	Load more laundry.
	Unstable floors eg. wooden floors.	Refer to relevant paragraph in “Positioning” section.
Cycle time longer than displayed:	Detergent over dose.	Reduce the detergent quantity or use another one. (Refer page 26 “Detergents Type And Quantity Of Detergent”).
	Machine unbalance.	Redistribute laundry manually in the drum and start the spin phase again.
The cycle is shorter than the time displayed.	The appliance calculated a new time according to the laundry load.	
Spinning starts late or machine does not spin:	The electronic unbalance detection device has cut in because the laundry is not evenly distributed in the drum. The laundry is redistributed by reverse rotation of the drum. This may happen several times before the unbalance disappears and normal spinning can resume. If, after 10 minutes, the laundry is still not evenly distributed in the drum, the machine will not spin. In this case, redistribute the load manually and select the spin program.	Pause the machine and redistribute laundry manually.
Machine makes an unusual noise:	Machine not installed properly.	Make sure the levelling of the appliance is correct. Refer to “Installation”.
	Transit bolts or packaging not removed.	Make sure that the packaging and/or the transit bolts are removed. Refer to “Unpacking”.
	The load may be too small.	Add more laundry in the drum.
No water is visible in the drum:	Machines based on modern technology operate very economically using very little water without affecting performance.	

Malfunction	Possible cause	Solution
Machine does not dry or does not dry properly:	The “Time Dry” or the “Dryness Level” degree has not been selected.	Select the drying time or the dryness level degree.
	The water tap is not turned on. (Error code: E 10)	Open the water tap.
	The drain filter is clogged. (Error code: E20)	Clean the drain filter.
	The machine is overloaded.	Reduce the laundry load in the drum.
	The selected drying program, time or dryness level was not suitable for the laundry.	Select the suitable drying program, time or dryness level for the laundry.
Display time is frozen at the end of drying cycle for more than 30 minutes:	Machine is optimizing the drying cycle according to the laundry type and load size. It will vary for each kind of fabric as the water absorption is different.	This is a normal behavior of the machine and not a cause for concern as it does not compromise its performance.

NOTE

If you are unable to identify or solve the problem, contact our service centre. Before calling service centre, make a note of the model, serial number and purchase date of your machine: the Service Centre will require this information.

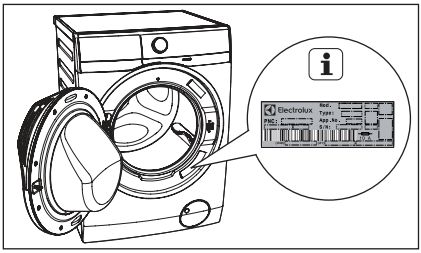

12.2 Emergency Door Opening

In case of power failure or appliance failure, the appliance door remains locked. The wash program continues when power is restored. If the door remains locked in case of failure, it is possible to open it using the emergency unlock feature.

Before opening the door:

WARNING!

Make sure that the water temperature and the laundry are not hot. Wait until they cool down if necessary.

Make sure that the water level inside the drum is not too high. If necessary, perform an Emergency Drain (see page 33).

Make sure that the drum is not rotating. Wait until the drum stops rotating if necessary.

To open the door proceed as follows:

1. Press the On/Off button to switch the appliance off.
2. Disconnect the mains plug from the mains socket.
3. Open the filter cover.
4. Without touching the door. Insert a small flathead screw driver into the slot on emergency unlock strap(red strap) and pull down twice then pull the door open.
   Repeat if unsuccessful.

   Note: Do not pull down emergency strap too hard.

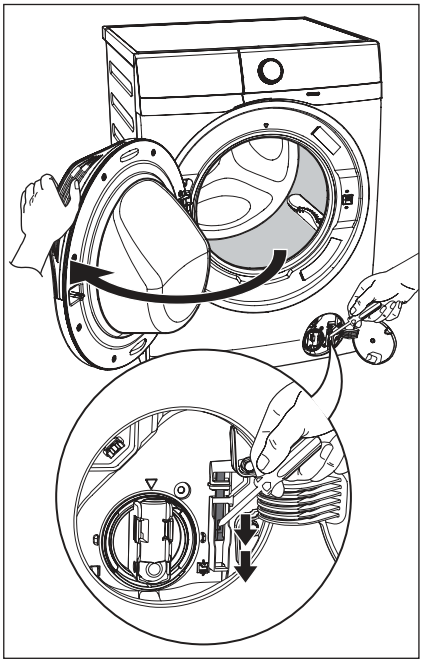

5. Take out the laundry.
6. Close the filter flap.

13. TECHNICAL DATA

Dimensions (Height / Width / Depth)		85 X 60 X 65.9 cm
Power supply (Voltage / Frequency)		220-240 V~ / 50 Hz
Total power absorbed		Wash: 2100 W / Dry: 1500 W
Minimum fuse protection		10 A
Water supply pressure (Maximum / Minimum)		0.8 MPa / 0.05 MPa
Maximum dry clothes capacity	**Washing**	**Drying**
	Cottons 11 kg	7 kg
	Mixed 4 kg	3 kg
	Bedding 3 kg	–
	Sports 4 kg	–
	Energy Saver 11 kg	7 kg
	Vapour Refresh 1.5 kg	–
	Tub Clean –	–
	Spin 11 kg	7 kg
	Rinse + Spin 11 kg	7 kg
	Quick 15 1.5 kg	–
	Daily 60 5.5 kg	4 kg
	Wool 2 kg	1 kg
	Delicates 4 kg	–
	WashDry 60 1 kg	1 kg
	Favourite ☆ –	–
Spin speed (Maximum / Minimum)		1400 rpm / 400 rpm

14. INSTALLATION

14.1 Unpacking

CAUTION!

All transit bolts and packing must be removed before using the appliance.

You are advised to keep all transit devices so that they can be refitted if the machine ever has to be transported again.

1. Use gloves. Cut and remove four cut out straps as shown.

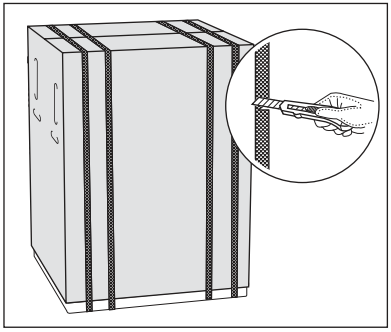

2. Remove the carton box. Remove the polystyrene packaging materials.

   Remove the plastic bag which cover the machine.

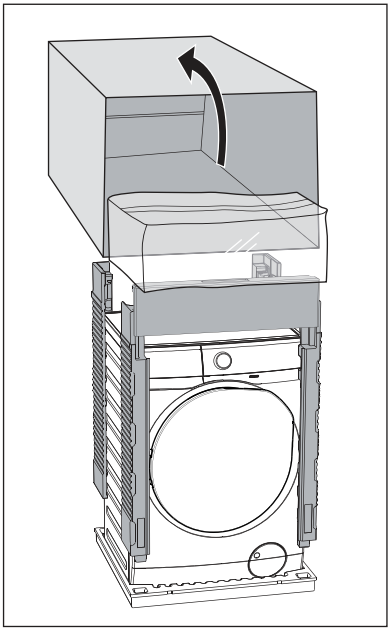

3. Open the door. Remove the polystyrene piece from the door seal and all the items from the drum.

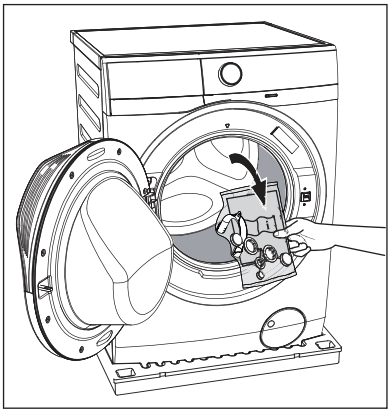

4. Put one of the polystyrene packaging elements on the floor behind the appliance. Carefully put down the appliance with the rear side on it. Make sure not to damage the hoses.

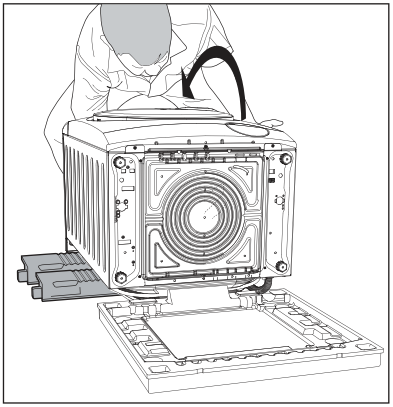

5. Remove the polystyrene base.

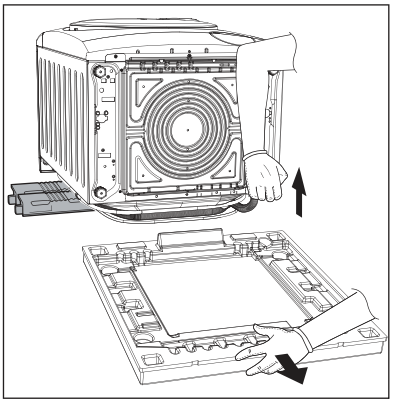

6. Pull up the appliance in vertical position.

7. Remove the power supply cable and the drain and inlet hoses from the hose holders (A) on the rear of the appliance.

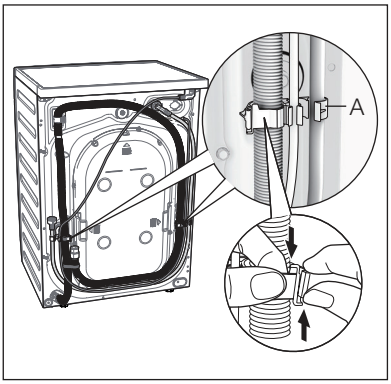

8. Remove the three transit bolts.
9. Pull out the plastic spacers.

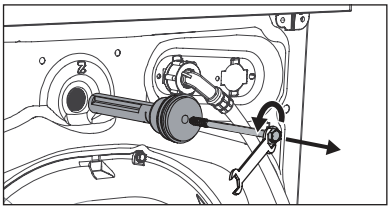

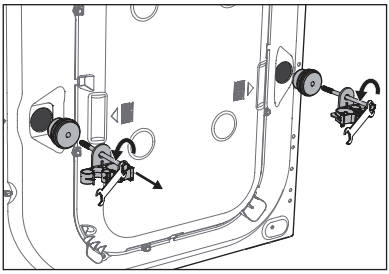

10. Put the plastic caps in the holes (X3). You can find these caps in the user manual bag.

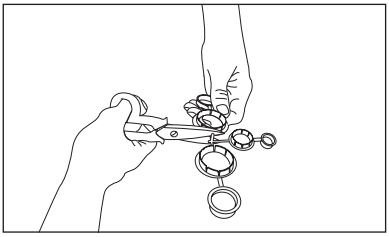

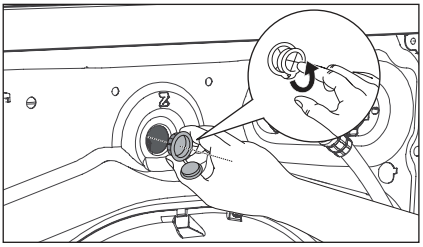

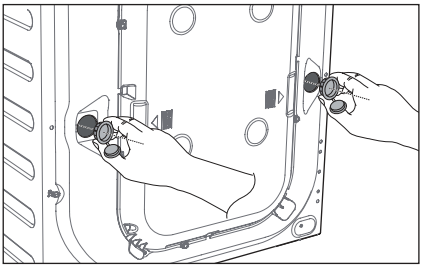

14.2 Positioning

It is important that your Wahser-Dryer stands firm and leveled on the floor to ensure correct operation. The appliance must not be installed behind a lockable door, a sliding door or a door with a hinge on the opposite side to avoid restricting the Wahser-Dryer door.

Use a spirit level on the top and side of the Wahser-Dryer to check the levels.

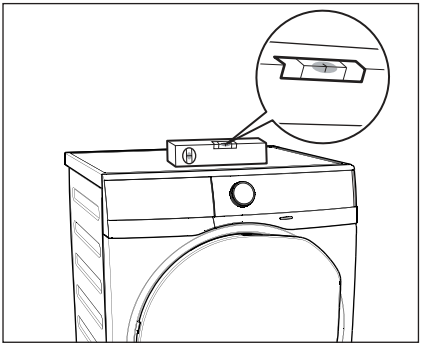

If you do not have a spirit level, as a guide use the edge of a door frame, cupboard or bench to check that the Wahser-Dryer is leveled.

Loosen or tighten the feet to adjust the level. A correct adjustment of the appliance level prevents vibration, noise and the movement of the appliance when in operation.

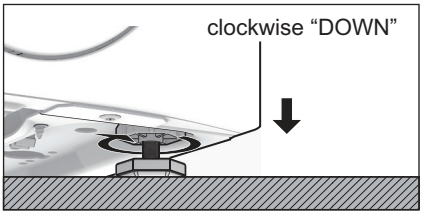

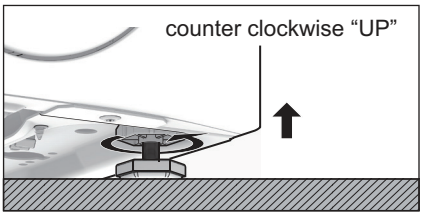

When the Wahser-Dryer is levelled, try to rock it from corner to corner. If it does rock, adjust the legs again until it is levelled and does not rock.

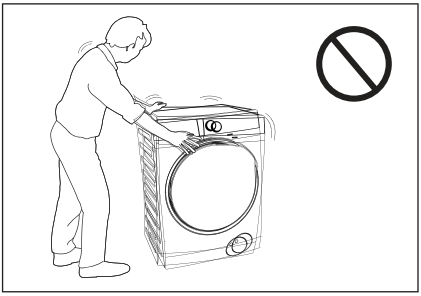

Never place cardboard, wood or similar materials under the machine to compensate for any unevenness in the floor. Install the machine on a flat hard floor. Make sure that air circulation around the machine is not impeded by carpets, rugs etc.

Check that the machine does not touch the wall or cupboard units.

14.3 Water Inlet

Connect the water inlet hose to a tap with 3/4” BSP thread.

Use the hose supplied with the Wahser-Dryer. DO NOT USE OLD HOSES.

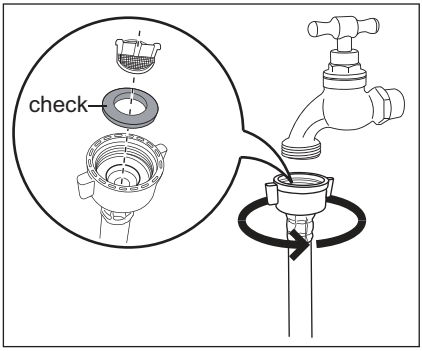

The inlet hose must not be lengthened. If it is too short and you do not wish to move the tap, you will have to purchase a new, longer hose specially designed for this type of use.

Loosen the ring nut to angle the hose to the left or right depending on the position of your water tap. Do not place the inlet hose downwards. After positioning the inlet hose, be sure to tighten the ring nut again to prevent leaks.

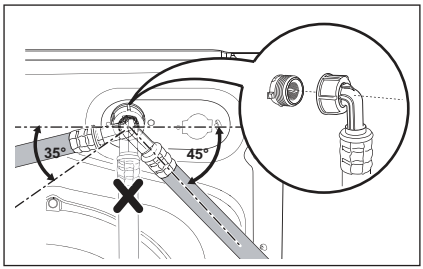

14.4 Water Drainage

The end of the drain hose can be positioned in three ways:

- **Hooked over the edge of a sink**, using the plastic hose guide supplied with the machine.

Fitting Hose Guide

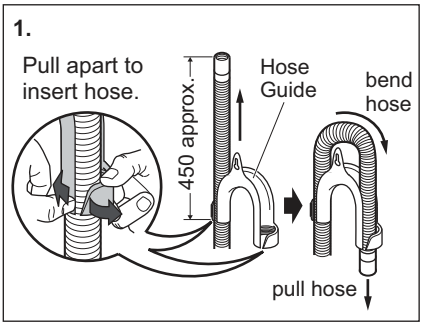

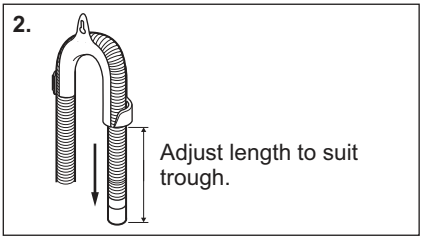

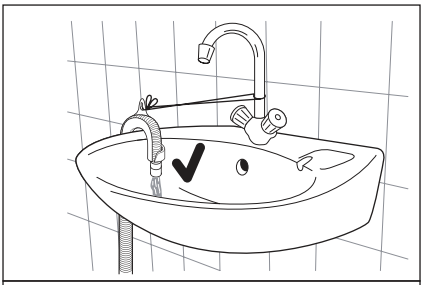

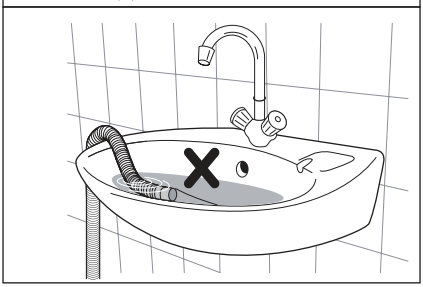

In this case, make sure the end cannot come unhooked when the machine will be emptied. This could be done by tying it to the tap with a piece of string or attaching it to the wall.

- **In a sink, drain pipe branch.**

  This branch must be above the trap so that the bend is at least 60 cm above the ground.

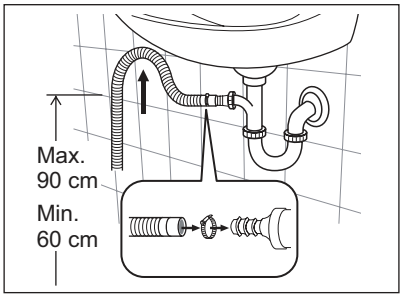

Push the drain hose onto the spigot and secure with a clamp, ensure a loop is formed in the drain hose to prevent waste from the sink entering the appliance.

- **Directly into a drain pipe,** at a height of not less than 60 cm and not more than 90 cm.

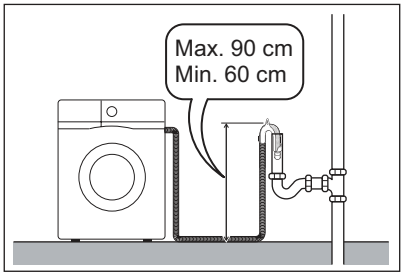

The end of the drain hose must always be ventilated, i.e. the inside diameter of the drain pipe must be larger than the outside diameter of the drain hose.

The drain hose must not be twisted or curled. Run it along the floor; only the part near the drainage point must be raised.

For the correct functioning of the machine, the drain hose must remain hooked on the proper support piece situated on the top part of back side of the appliance.

14.5 Electrical Connection

This machine is designed to operate on a 220-240 V, single-phase, 50 Hz supply.

“An incorrect power supply may void your warranty.”

Check that your domestic electrical installation can take the maximum load required (refer page 39), also taking into account any other appliances in use.

CAUTION!
Connect the machine to an earthed socket outlet.

The manufacturer declines any responsibility for damage or injury through failure to comply with the above safety precaution.

Should the appliance power supply cable need to be replaced, this shall be carried out by our Service Centre.

When the appliance is installed, the power supply cable must be easily accessible.

15. ENVIRONMENT CONCERNS

15.1 Packaging Materials

The materials marked with the symbol ♲ are recyclable.

>PE<=polyethylene
>PS<=polystyrene
>PP<=polypropylene

This means that they can be recycled by disposing them properly in appropriate collection containers.

15.2 Old Machine

Use authorized disposal sites for your old appliance. Help to keep your country tidy!

The symbol on the product or on its packaging indicates that this product may not be treated as household waste.

Instead it shall be handed over to the applicable collection point for the recycling of electrical and electronic equipment. By ensuring this product is disposed of correctly, you will help prevent potential negative consequences for the environment and human health, which could otherwise be caused by inappropriate waste handling of this product.

For more detailed information about recycling of this product, please contact your local city office, your household waste disposal service or the shop where you purchased the product.

15.3 Ecological Hints

To save water, energy and to help protect the environment, we recommend that you follow these tips:

- Normally soiled laundry may be washed without prewashing in order to save detergent, water and time (the environment is protected too!).
- The machine works more economically if it is fully loaded.
- With adequate pre-treatment, stains and limited soiling can be removed; the laundry can then be washed at a lower temperature.
- Measure out detergent according to the water hardness, the degree of soiling and the quantity of laundry being washed.

可能影响您保修资格的重要信息

遵守本手册中的使用说明对于健康和安全非常重要。如果未严格遵守本手册中的要求，可能会导致人身伤害、财产损失，并会影响您根据产品随附的伊莱克斯维修服务指南申请保修。必须按照本手册使用、安装和操作产品。如果您的产品由于未遵守本手册出现故障，您可能无法根据伊莱克斯维修服务指南申请保修。

想您所想

感谢您选购伊莱克斯电器。您选择的产品蕴含着我们数十年的专业经验和创新。该产品集独创性和时尚性于一身，在设计过程中想您所想，是您的不二之选。每次使用时，都可安心畅享其超凡效果。欢迎来到伊莱克斯的世界。

请访问我们的网站：

若要获取使用建议、手册、故障排除、维修服务信息，请在线注册产品，网址为：
www.electrolux.com.cn

客户关怀与服务

我们建议使用原厂备件。联系服务人员时，请确保提供下列信息。您可在铭牌上找到这些信息。型号、PNC 和序列号。

警告/安全警示信息。

一般信息和温馨提示

环保信息。

如有变更，恕不另行通知。

目录

1. 安全信息
   - 1.1 使用条件 47
   - 1.2 童锁功能 48
   - 1.3 一般安全要求 48
   - 1.4 安装 49
   - 1.5 使用 49
2. 产品描述
   - 2.1 零件 51
   - 2.2 配件 52
3. 控制面板
   - 3.1 控制面板说明 53
   - 3.2 程序图 54
   - 3.3 程序选项 55
   - 3.4 选项 56
   - 3.5 设置 60
   - 3.6 启动 / 暂停 (▷II) 和添加衣物 ( ) 触摸按键 60
4. 首次使用前准备 61

5. 日常使用 - 仅限洗涤
5.1 装入衣物 62
5.2 使用洗涤剂和添加剂 62
5.3 选项设置 63
5.4 启动洗涤 (▷||) 64
5.5 中断程序 64
5.6 更换程序 64
5.7 更改选项 64
5.8 打开机门 64
5.9 程序结束时 65
5.10 洗涤程序已结束，但滚筒中仍然有水 65
5.11 自动关闭模式 65

6. 日常使用 - 仅限烘干 66

7. 日常使用 - 洗涤和烘干（连续程序）
7.1 洗涤程序 +“烘干等级”选项 66
7.2 洗涤程序 +“烘干时间 ⏱”选项 67

8. 洗涤提示
8.1 分类洗涤 68
8.2 温度 68
8.3 装入衣物之前 68
8.4 最大装载量 68
8.5 去除污渍 68
8.6 洗涤剂类型和用量 69

9. 烘干提示
9.1 烘干运行准备 70
9.2 不适合烘干的衣物 70
9.3 服装标签 70
9.4 烘干运行持续时间 70
9.5 额外烘干 71

10. 国际洗涤代码符号 71

11. 保养与清洁
11.1 外部清洁 72
11.2 除垢 72
11.3 每次洗涤后 72
11.4 使用“筒清洁”程序维护清洁 72
11.5 清洁洗涤剂分配器抽屉 72
11.6 清洁抽屉凹槽 73
11.7 清洁排水泵 73
11.8 清洁进水软管过滤器 75
11.9 防冻措施 76

12. 故障检修
12.1 可能出现的故障 77
12.2 应急开门程序 81

13. 技术参数 82

14. 安装
14.1 拆箱 82
14.2 定位 84
14.3 进水口 85
14.4 排水 85
14.5 电气连接 87

15. 环保信息
15.1 包装材料 87
15.2 旧机器 87
15.3 生态保护提示 87

维修服务指南 88

产品保修卡 89

1. ⚠ 安全信息

1.1 使用条件

本机为家用电器，也可于下列环境中应用：

- 商店、办公室和其他工作环境中的员工厨房区；
- 农舍；
- 由酒店、汽车旅馆和其他住宅类型环境中的旅客所用；
- 简易宾馆类型的环境；
- 住宅区公共洗衣区域或自助洗衣店。

⚠ **警告！** 本机不得通过外部开关装置（例如定时器）供电，或连接到通过公共设备定时开关的电路上。

为了您的安全以及确保正确使用本机，在安装和首次使用本机之前，请仔细阅读本用户手册，包括提示和警告。

为了避免不必要的错误和事故，请务必确保所有使用本设备的人员均完全熟悉其操作和安全功能。

请妥善保管此说明并确保移动或出售本机时将其随附，以确保在其使用年限内使用本机的每位人员正确了解使用方法和安全信息。

1.2 童锁功能

- 请勿让儿童或健康存在缺陷的人员在无人监护的情况下使用本洗衣干衣机。
- 应妥善看护儿童，勿使他们玩弄本机。
- 包装组件（例如塑料薄膜、聚苯乙烯）可能会对儿童造成窒息危险！防止儿童触及。
- 请将洗涤剂放置在儿童无法触及的地方。
- 请确保儿童或宠物不会爬进滚筒。
- 本机器具有童锁功能 (⊡) 可防止儿童操作控制面板。（请参阅第 60 页）

1.3 一般安全要求

- 任何更改参数或尝试改装电器的行为都是非常危险的。
- 在高温清洗程序运行时，门玻璃可能会发烫。请勿触摸！
- 请确保小型宠物不会爬进滚筒。为了避免这种情况的发生，请在使用本机前检查滚筒内部。
- 任何例如硬币、安全别针、钉子、螺丝、石头等物品或任何其他坚硬、锋利的材料，都可能会对机器造成严重损坏，严禁放入机器。
- 袜子、鞋带、可清洗的皮带等小物品请放入洗衣袋或枕套中清洗，因为这些小物品可能会滑落到洗衣桶与滚筒之间而无法取出。
- 请使用制造商的推荐衣物柔顺剂和洗涤剂用量。如果超过推荐的量，可能会对衣物或本机造成损坏。
- 不要使用洗衣干衣机清洗带钢圈的内衣、未缝边或撕裂的衣物。
- 请在使用、清洁和维护后拔掉本机插头并关闭进水。
- 本机不适合存在身体缺陷、感官或精神障碍或缺乏相关经验及知识的人员（包括儿童）使用，除非上述人员在其监护人的监督或指导下使用本机。
- 无论在任何情况下都不要尝试自己修理设备。如果由毫无经验的人员进行维修，可能会造成人身伤害或机器严重故障。请联系本地服务中心。请始终使用原装备件。

1.4 安装

- 本设备非常重。移动时应注意安全。
- 在本设备开箱时，请检查其是否有损坏。如有疑问，请勿使用并联系服务中心。
- 所有用于包装和运输的螺栓在使用前必须全部拆除。如果未遵守规定，可能会对产品造成严重损坏并带来财产损失。请参阅用户手册中的相关部分。
- 在本机安装完成后，请检查其是否压住进水和排水管，以及台面是否压住电源线。
- 如果将本机安装在地毯上，请调整底脚，确保空气流通。
- 请始终确保安装后软管及其连接处没有漏水现象。
- 任何安装所需管道工作必须由有资质的管道工完成。
- 任何安装所需电气工作必须由有资质的电气工完成。

⚠ **如果机器未连接到接地系统，可能会导致触电！请勿触摸湿透的衣物和金属部件。**

⚠ **出于安全原因，请勿使用双适配器，延长线和多插头适配器。**

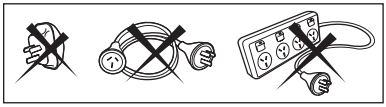

1.5 使用

- 仅用于洗涤可机洗衣物。遵循服装标签上的说明。
- 请勿过量装载。请参阅用户手册中的相关部分。
- 清洗前，请确保已清空口袋，纽扣和拉链已系好。避免洗涤磨损或撕裂的物品，并在洗涤前处理油漆、油墨、铁锈和草等污渍。
- 沾染挥发性石油产品的服装不能机洗。如果使用了挥发性清洁液，应注意确保在放入机器之前将液体从服装上除去。
- 从插座上拔下插头时，切勿直接拉动电源线，而是应始终握住插头本身。
- 如果电源线、控制面板、工作台面或底座损坏，切勿使用洗衣干衣机，从而可接触到洗衣干衣机的内部。
- 由于某些羽绒被的体积较大，应在大型商用机器中进行洗涤 / 烘干，如果想要使用家用机器对其进行洗涤 / 烘干，请首先与其生产厂家联系。
- 用户应始终检查衣物中是否遗留有气体打火机（一次性或其他类型）。
- 切勿烘干接触过化学物质（如干洗液）的物品。这些物品具有挥发性，可能会引起爆炸。只能烘干已用水清洗或需要晾干的物品。
- 由于洗涤剂分配抽屉不耐高温，所以不要把它在放入滚筒内烘干！

注意!

- 切勿在烘干运行结束前停止洗衣干衣机，除非快速取出和分散所有物品，以便散热。
- 请勿在洗衣干衣机中使用干洗溶剂烘干衣物。此外，在烘干运行期间切勿使用强力去污产品。

为了将洗衣干衣机的火灾风险降至最低，应遵守以下规定：

- 被植物油或食用油弄脏或浸泡的物品存在火灾危险，不应放在洗衣干衣机中。被油污染的物品可能会自燃，特别是在接触到诸如洗衣干衣机中的热源时。物品会变热，进而导致油发生氧化反应。
- 若热量无法排出，那么物品就会热到足以引发火灾的地步。堆叠、堆放或储藏被油污染的物品会阻止热量排出从而造成火灾隐患。
- 如果一定要将含有植物油或食用油，或已被护发产品污染的织物放入洗衣干衣机中，则应先使用热水和额外洗涤剂对其进行洗涤，这样可以降低风险但并不会消除隐患。洗衣干衣机的“冷却”运行用于降低物品的温度。如果物品的温度很高，则不应从洗衣干衣机中取出或者堆叠或堆放。
- 之前使用汽油、干洗溶剂或其他易燃或爆炸性物质清洁、洗涤、浸泡过或被这些物质弄脏的物品不应放在洗衣干衣机中。
- 家庭环境中常用的高度易燃物质包括丙酮、变性酒精、汽油、煤油、去斑剂（某些品牌）、松节油、蜡和去蜡剂。
- 如果物品含有泡沫橡胶（也称为乳胶泡沫）或类似质地橡胶等材料，不应在洗衣干衣机中使用热设置进行烘干。
- 泡沫橡胶材料在受热时会发生自燃，从而导致火灾。
- 除非织物柔顺剂及类似商品的制造厂家推荐使用，否则为消除静电影响，不应将这些产品用于洗衣干衣机。
- 含有金属加固物的内衣不应放在洗衣干衣机中。如果金属加固物在烘干过程中松动，可能会导致洗衣干衣机损坏。如果提供烘干架，可以用于烘干此类衣物。
- 塑料物品（例如淋浴帽或婴儿防水餐巾套）不应放在洗衣干衣机中。

2. 产品描述

2.1 零件

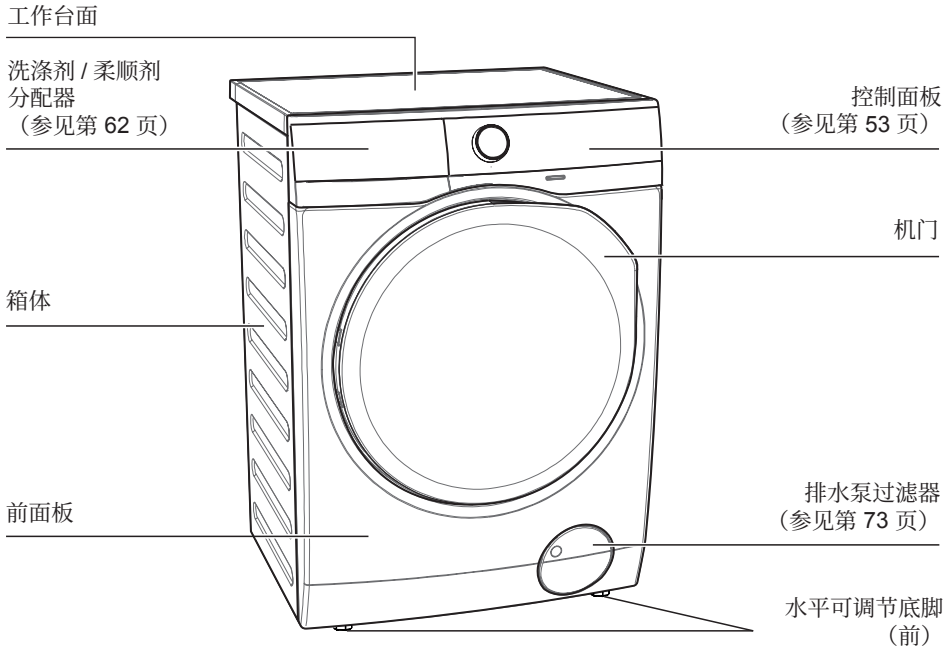
工作台面
洗涤剂 / 柔顺剂
分配器
（参见第 62 页）
控制面板
（参见第 53 页）
机门
箱体
前面板
排水泵过滤器
（参见第 73 页）
水平可调节底脚
（前）

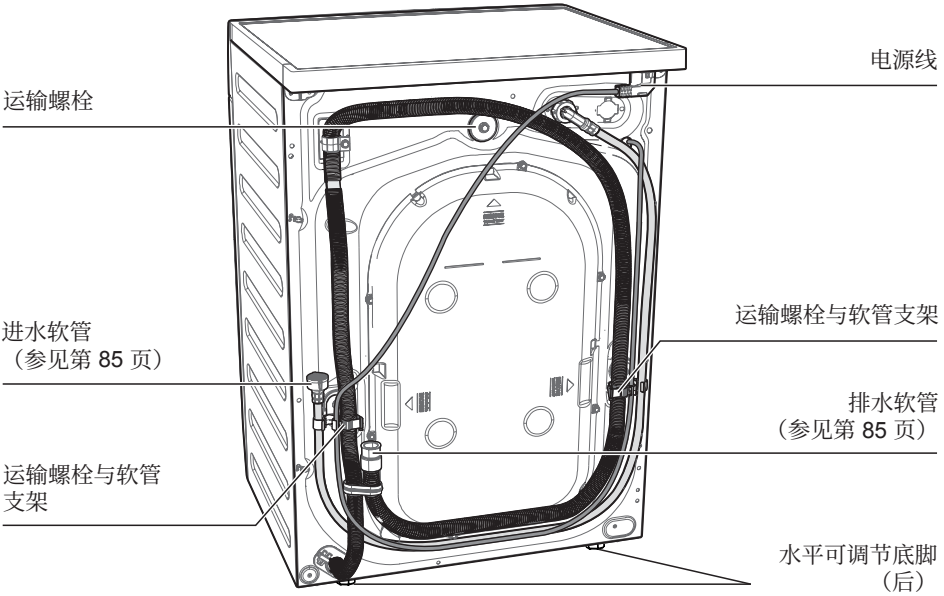
电源线
运输螺栓
运输螺栓与软管支架
进水软管
（参见第 85 页）
排水软管
（参见第 85 页）
运输螺栓与软管
支架
水平可调节底脚
（后）

洗涤剂 / 柔顺剂分配器
（有关更多信息，请参阅第 62、72 页）

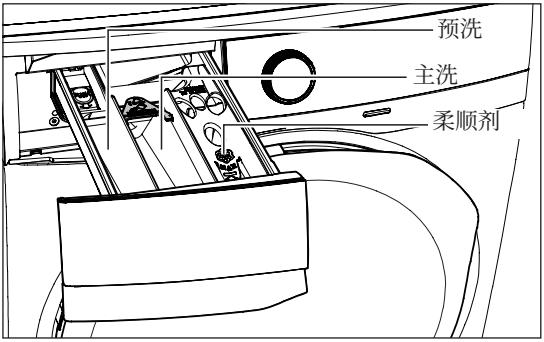

机门（打开时）
（有关更多信息，请参阅第 62 页）

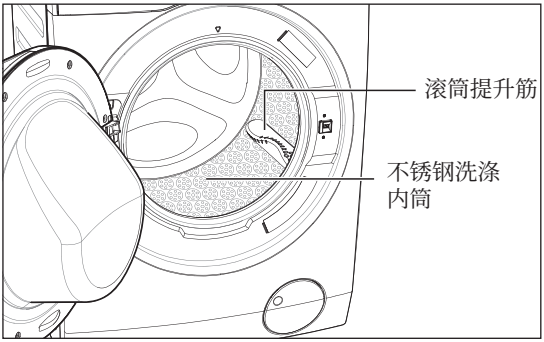

排水泵过滤器（打开时）

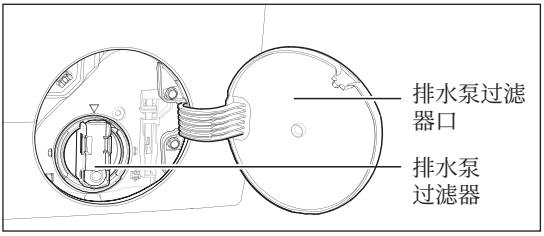

水平可调节底脚

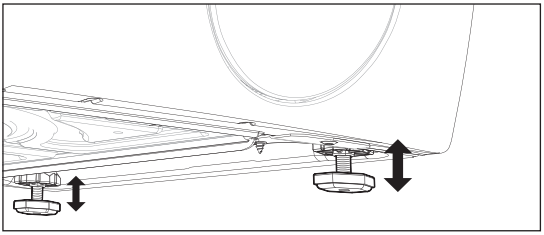

运输螺栓（拆除时）

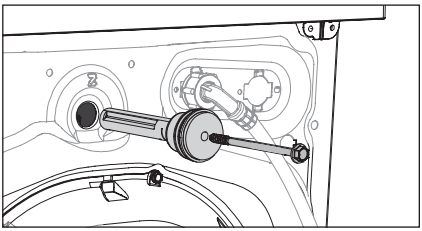

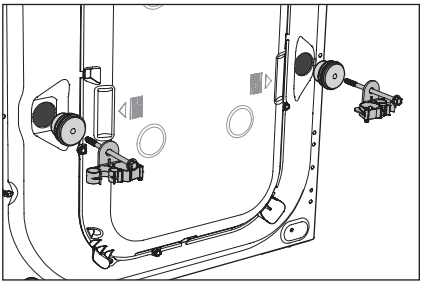

使用本机前必须拆下运输螺栓。

2.2 配件

塑料盖

用于在拆下运输螺栓后堵住电器后面的孔。

塑料软管导向套

用于将排水软管连接至水槽边。

3. 控制面板

3.1 控制面板说明

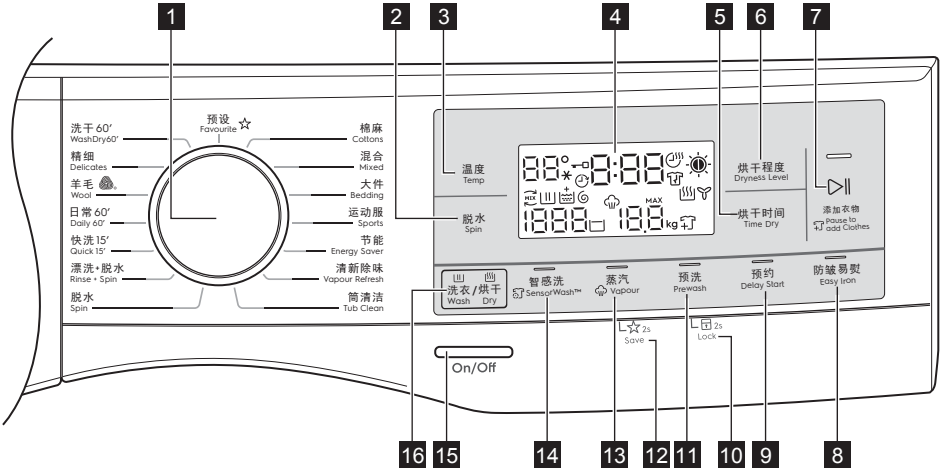

1	程序选择旋钮	9	预约触摸按键
2	脱水选择触摸按键	10	童锁选项
3	温度选择触摸按键	11	预洗触摸按键
4	显示屏	12	保存预设程序选项
5	烘干时间触摸按键	13	蒸汽触摸按键
6	烘干程度触摸按键	14	智感洗触摸按键
7	启动 / 暂停和添加衣物触摸按键	15	电源开 / 关按钮
8	防皱易熨触摸按键	16	洗衣 / 烘干模式选择触摸按键

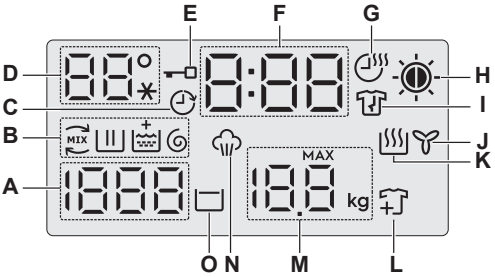

A) 脱水转速

B) 程序阶段指示图标:

Ultramix 活丽洗环节　洗涤环节

漂洗环节　脱水环节

C) 预约图标

D) 温度（✱ 表示冷洗）

E) 门锁图标

F) 洗涤剩余 / 预约时间

G) 烘干时间图标

H) 烘干程度图标

特干　晾干

熨干

I) 防皱图标

J) 冷却环节图标

K) 烘干环节图标

L) 添加衣物图标

M) 所选程序的最大装载容量

N) 蒸汽环节图标

O) 延迟脱水图标

3.2 控制面板说明

程序；温度范围	最大脱水速度	最大装载量（干燥衣物）		衣物类型和脏污程度
		洗衣	烘干	
棉麻； 冷水至 90°C	1400 rpm	11 kg	7 kg	白色和彩色棉织物。
混合； 冷水至 60°C	1200 rpm	4 kg	3 kg	化纤或混纺纤维织物。
大件； 冷水至 60°C	800 rpm	3 kg	–	适用于化纤毯、羽绒被、床罩等的特殊程序。
运动服； 冷水至 40°C	1200 rpm	4 kg	–	轻柔程序，专为精细混纺纤维织物设计。
节能； 冷水至 40°C[1)]	1400 rpm	11 kg	7 kg	白色和彩色棉织物。设置此程序能够实现良好的洗涤效果，并降低能耗。洗涤程序的时间延长。
清新除味	–	1.5 kg	–	此程序有助于去除衣物上的气味和皱褶。 i 不要添加洗涤剂。
筒清洁；60°C	–	–	–	用于清洁滚筒。
脱水	1400 rpm	11 kg	7 kg	用于对衣物进行脱水并排出滚筒中的水。
漂洗 + 脱水	1400 rpm	11 kg	7 kg	用于对衣物进行漂洗和脱水。
快洗 15'； 30°C	800 rpm	1.5 kg	–	轻微脏污的化纤或混纺纤维织物。
日常 60'； 30°C 至 60°C	1400 rpm	5.5 kg	4 kg	彩色棉织物，例如脏污程度一般的衬衫、女士衬衫、毛巾和内衣。
羊毛 ； 冷水至 40°C	1200 rpm	2 kg	1 kg	经羊毛局认证程序，适用于具有“纯羊毛、不缩水、可机洗”标签的羊毛服装。
精细； 冷水至 40°C	1200 rpm	4 kg	–	丙烯酸纤维、粘胶纤维、聚酯纤维等精细织物。

程序；温度范围	最大脱水速度	最大装载量（干燥衣物）		衣物类型和脏污程度
		洗衣	烘干	
洗干 60'； 30°C、40°C	1200 rpm	1 kg	1 kg	连续洗涤和烘干程序，用于清洗轻微脏污的 3 - 5 件衬衫。
预设	–	–	–	常用程序。

1) 40°C 和 1400rpm 的节能程序为能效等级测试程序，建议用于清洗脏污程度一般的棉麻衣物。

纯羊毛衣物护理 - 蓝色

本机器的羊毛洗涤程序已获“国际羊毛局”批准，可用于洗涤标有“手洗”标志的羊毛服装，前提是要遵循本机器制造商提供的说明书进行洗涤。

衣物烘干处理请遵循衣物护理标签及相关说明。M1361

纯羊毛符号是许多国家的认证标志。

3.3 程序选项

程序	--- 不脱水	选项 延迟漂洗	烘干程度 2)	烘干时间 2)	防皱易熨	预约	预洗	蒸汽 1)	智感洗
棉麻	○	○	○	○	○	○	○	○	○
混合	○	○	○3)	○	○	○	○	○	○
大件	○	×	×	×	×	○	×	○	○
运动服	○	○	×	×	×	○	○	×	○
节能	○	○	○	○	×	○	○	○	×
清新除味	×	×	×	×	×	○	×	○	×
筒清洁	–	–	–	–	–	–	–	–	–
脱水	○	×	○	○	×	○	×	×	×
漂洗 + 脱水	○	○	○	○	×	○	×	×	×
快洗 15'	○	○	×	×	×	○	×	×	×
日常 60'	○	○	○	○	×	○	×	×	×
羊毛	○	○		○	×	○	×	×	×
精细	○	○	×	×	×	○	○	○	○
洗干 60'	×	×	×	×	×	○	×	×	×
常用程序	–	–	–	–	–	–	–	–	–

1) 蒸汽选项只能与 40°C 至 90°C 的温度范围组合。

2) 请勿选择低于本机建议的脱水转速，以避免烘干时间过长，从而节省能源。在任何情况下，只有在选择“烘干”选项后才能降低脱水速度。

3) 此程序只能选择“晾干”选项。

3.4 选项

洗衣 / 烘干模式触摸按键

此触摸按键用于选择机器的程序模式。可用的程序模式包括：

- 仅限洗涤（默认）
- / 洗涤和烘干模式
- 仅限烘干

如果模式与所选程序不兼容，显示屏上的“– – –”图标将闪烁，并发出蜂鸣声。

只有关掉机器，才能更改正在运行的程序。

温度选择触摸按键

如果您不想在洗衣干衣机建议的温度下洗涤衣物，请反复按此触摸按键来增加或降低洗涤温度。

脱水选择触摸按键

如果您不想在洗衣干衣机建议的速度下对衣物进行脱水，请反复按此触摸按键增来加或降低脱水速度或选择“延迟漂洗”。

- 不脱水 (– – –)

  不脱水选项可省略所有脱水环节并增加漂洗次数。

- 延迟脱水 ( )

  选择该选项后，最后漂洗的水不会被清空，并且滚筒会按规律旋转以防止衣物起皱。

  机门仍然处于锁定状态，这表示必须将水清空。

  如果滚筒中有水，机门会保持锁定。若要继续运行，则必须按 ▷II（启动/暂停）。

SensorWash ( ) 触摸按键

选择“SensorWash”（智感洗）选项打开污渍和洗涤剂残留感应器。

默认情况下，“智感洗”处于打开状态。如果要关闭感应器，请按此触摸按键一次。（有关可与此选项配合使用的程序，请参阅“程序选项”表格。）

使用此功能时，洗衣机将自动检查衣物中的脏污程度和洗涤剂残留。此选项会根据装载量自动调整洗涤时间和漂洗次数，以确保您的衣服非常干净。

双重检测传感器设计、实现智感洗技术：

运行开始时，第一重光照传感器检测判断衣物脏污程度，并会自动计算清洗脏污衣物所需要的时间。

控制面板上显示的初始时间表示清洗脏污程度最高的衣物所需的时间。

第一次洗涤后，第二重电导率传感器将检测判断洗涤剂残留量，计算确保完全洗涤剂残留所需的最佳漂洗次数（最多 2 次额外漂洗）。

有关洗涤剂使用情况的详细信息，请参阅“洗涤剂类型和用量”。

蒸汽 ( ) 触摸按键

选择此功能可在洗涤运行期间增加大约 30 分钟的蒸汽洗环节。蒸汽有助于渗入织物纤维，帮助去除顽固污渍。此选项的指示灯将亮起。

- 在蒸汽洗涤期间，滚筒内部可能看不到蒸汽。蒸汽在滚筒下方产生并自然地上升到衣服中。
- 在整个蒸汽洗涤期间，可能看不到蒸汽。
- 如果洗涤衣物量为最大装载量的一半，蒸汽洗功能将会更加高效。
- 在蒸汽运行结束时，衣物变得温热、更柔软，并可轻松从滚筒中分离取出。

注意

如果选择蒸汽选项，则会提高漂洗温度。

在蒸汽运行期间，可能会从洗衣干衣机的排水软管中排出蒸汽，这是正常现象，无需惊慌。

预洗触摸按键

如果您希望在主洗之前对衣物进行预洗，请选择此选项。此选项适用于洗涤重度脏污的衣物。

此选项的指示灯将亮起。

设置此功能时，请在“ ”投放格中添加洗涤剂。此功能可增加程序运行时间。

预约触摸按键

此选项可以将程序的启动延迟 30 分钟、60 分钟或 90 分钟，如果需要延迟更长时间，可以按照小时设置，范围介于 2 小时到 20 小时之间。您选择的延迟时间将会显示在显示屏上。结束时间将会相应增加，以显示出所选的预约开始时间。

在设置程序之后以及按下“启动 / 暂停”按钮之前，必须选择此选项。

如果您希望在预约时间内向机器中添加衣物，请按下“启动 / 暂停”触摸按键暂停机器。添加衣物，关上机门并再次按下“启动 / 暂停”触摸按键。

您可以随时取消预约时间，方法为反复按“预约”触摸按键，直到显示屏显示预约时间为“0”，然后按下“启动 / 暂停”触摸按键。

防皱易熨触摸按键

选择此选项后，机器会轻柔地对衣物进行洗涤和脱水，从而避免起皱。这种方法洗出来的衣物，熨烫会更容易。

此选项的指示灯将亮起。

烘干程度触摸按键

按此触摸按键可使用自动感应功能设置烘干程度。显示屏将显示所选选项。

- 特干
- 晾干
- 熨干

注意

- 烘干程度设置取决于所选洗涤程序。
- 最终时长是洗涤 + 脱水 + 烘干运行的总持续时间，基于默认衣物量计算得出。

- 程序结束时，本机将执行大约 10 分钟的防皱环节。在此期间，显示屏将显示剩余时间“E nd”，并且机门处于锁定状态“-0”。

如果您想要在防皱环节打开机门或中断程序，请按下“启动 / 暂停”触摸按键。

烘干选项：

烘干程度	织物类型	装载量
特干 非常适合毛巾或类似物品	棉麻织品 （浴衣、浴巾等）	最多 7 kg
晾干 适用于无需熨烫即可收纳的衣物	棉麻织品（浴衣、浴巾等）	最多 7 kg
	化纤和混纺纤维织物（套头针织衫、女士衬衫、内衣及家用亚麻制品）	最多 3 kg
熨干 适用于熨烫	棉麻织品 （被单、桌布、衬衫等）	最多 7 kg

烘干时间 ( ) 触摸按键

如果您希望执行定时烘干程序，请按住此触摸按键，直到所需时间出现。

注意

- 定时烘干允许最高时长会根据所选洗涤程序变化。
- 最终时长是洗涤 + 脱水 + 烘干运行的总持续时间。
- 程序结束时，本机将执行大约 10 分钟的防皱环节。在此期间，显示屏将显示剩余时间“E nd”，并且机门处于锁定状态“ ”。

如果您想要在防皱阶段打开机门或中断程序，请按下“启动 / 暂停”触摸按键。

烘干时间选项：

织物类型	装载量 (kg)	脱水速度 (rpm)	建议时间（小时）
棉麻织品（浴衣、浴巾等）。	5 - 7	1400	3 - 4
	3 - 5	1400	2 - 3
	2 - 3	1400	1 - 2
化纤或混纺纤维织物（套头针织衫、女士衬衫、内衣及家用亚麻制品等）。	3	1200	2 - 3
	1	1200	1
羊毛和可手洗羊毛织品。	1	1200	2

烘干运行持续时间

烘干时间会根据下列因素改变：

- 最终脱水速度；
- 烘干程度（特干、晾干或熨干）；
- 衣物类型；
- 洗涤衣物量。

纤维残留物

烘干蓬松织物（例如新毛巾）后，建议执行漂洗程序，以确保完全去除滚筒中的残留物，从而避免残留物粘附在稍后烘干的衣服上。每次烘干运行结束后，请清洁排水泵过滤器。请参阅第 11 部分“保养与清洁”中的保养与清洁事宜。

额外烘干

如果衣物在程序结束时仍然过湿，请再设置一个短暂的烘干程序。

- 洗衣干衣机运行的最后阶段在冷却条件下执行（冷却运行）。这可确保衣物处于低温状态。
- **警告！**

  为了防止织物皱折变形或收缩，请避免过度烘干。

3.5 设置

保存预设 (☆) 程序

可以保存经常使用的程序设置（例如，棉麻，60°C，1200 rpm，与预洗和蒸汽配合使用）。

要使用自行选择的选项安排 / 重新安排“预设”并进行保存，请按以下步骤操作:

1. 将机器置于待机模式。
2. 选择所需的程序设置。
3. 要保存预设程序，请按住“蒸汽 ”触摸按键约 2 秒，您将听到“哔哔”声并且“预设”LED 灯将闪烁。

要回到预设洗涤程序，请将选择旋钮转到“预设 ☆”程序。加载“预设”程序时，显示屏上将显示确认消息。

童锁 ( ) 选项

本机设有“童锁”功能，将门关闭后，无需您看管机器运行，再也不必担心儿童可能会受伤或导致设备损坏。

按“启动/暂停”触摸按键后设置此选项。

要设置“童锁”选项:

- 要激活功能，请按住“预洗”触摸按键 2 秒直到显示屏上出现“L OC”图标。

  如果您在“童锁”功能激活时按下任何触摸按键，则显示屏上的“L OC”图标将闪烁 3 次，同时发出蜂鸣声。

  除了“电源开 / 关”按钮之外，触摸按键均处于锁定状态。

  即使在关闭本机后，此功能仍保持启用状态。

- 要激活功能，请按住“预洗”触摸按键 2 秒直到显示屏上出现“u nL”图标。

启用 / 禁用洗涤结束蜂鸣器

此设置用于在程序结束时启用或禁用蜂鸣器。例如，如果在睡觉时开始洗涤，您可能希望禁用此蜂鸣器，洗涤任务会在大约 1 小时后完成，结束时不会打扰您的睡眠。

错误警告（例如严重故障）的蜂鸣声不会被禁用。

- 要禁用蜂鸣声，请同时按下“智感洗 ( )”和“蒸汽 ( )”触摸按键大约 3 秒钟，显示屏上将显示“b OF”图标，同时发出蜂鸣声。
- 要返回默认配置，请同时按下这两个触摸按键大约 3 秒钟，显示屏上将显示“b On”图标，同时发出蜂鸣声。

3.6 启动 / 暂停 (▷‖) 和添加衣物 ( ) 触摸按键

此触摸按键有 2 个功能:

1. 启动 / 暂停 (▷‖)

选择所需的程序和选项后，按此触摸按键启动机器。“启动 / 暂停”指示灯将停止闪烁并保持亮起状态，直到水位高于机门的底部边缘，然后指示灯熄灭。

如果您选择了“预约”选项，将开始倒计时并在显示屏上显示。

要中断正在运行的程序，请按下此触摸按键暂停机器，这时“启动 / 暂停”指示灯将会闪烁。

要在中断时重新启动程序，请再次按下此触摸按键，这时“启动 / 暂停”将会停止闪烁。

2. 添加衣物 ( )

只有在显示器上显示“”图标时，才可以添加衣物。

要添加衣物：

1. 按下“启动 / 暂停”触摸按键以暂停程序。
2. 请在机器完全停止（等待门锁“”图标关闭）后再将机门打开。
3. 添加衣物并关上机门。
4. 再次按下“启动 / 暂停”触摸按键恢复程序。

4. 首次使用前准备

注意

在安装过程中或首次使用之前，您可能会在机器中看到一些水。这是在工厂进行全面功能测试后残留在机器中的水，以确保机器以完美的工作状态交付给客户，因此无需担心。

1. 确保电气和水连接符合安装说明。
2. 向洗涤环节的洗涤剂投放格中放入 2 升水。排水系统将激活。

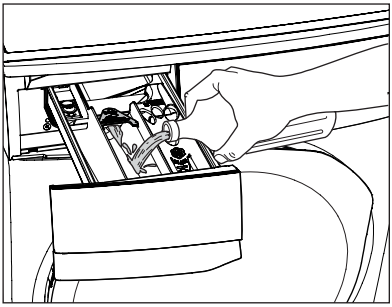

3. 在机器中未装入任何衣物的状态下选择 90°C 条件下的“棉麻”程序，以清除滚筒中的所有制造残留物，然后启动机器。

5. 日常使用 - 仅限洗涤

5.1 装入衣物

1. 打开水龙头。
2. 将电源插头插入电源插座。
3. 按下“电源开 / 关”按钮打开洗衣干衣机。旋转此旋钮可设置程序。洗衣干衣机会设置一个温度并为您选择的程序自动选择提供的脱水转速。

   可顺时针或逆时针旋转选择旋钮。
4. 检查并拿掉门封卷折边中的物品（如有）。

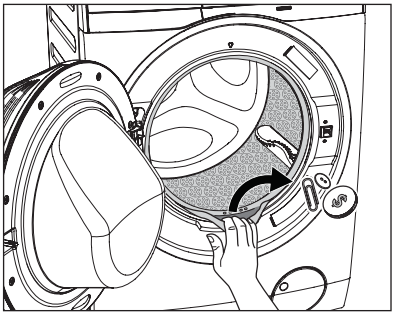

5. 将衣物放入滚筒，每次一件，并尽可能展开放置。（请参阅第 68 页“清洗提示”）
6. 关闭机门。

请确保密封条及机门之间没有夹住衣物。

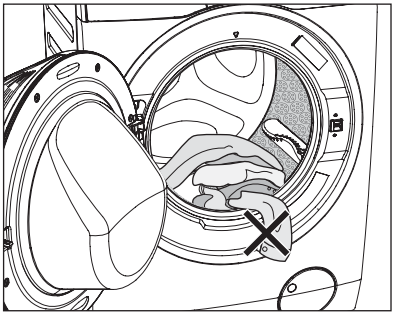

5.2 使用洗涤剂和添加剂

使用前，请阅读第 69 页的“洗涤剂类型和用量”。

1. 洗涤剂分配器抽屉

   洗涤剂分配器有三个投放格。

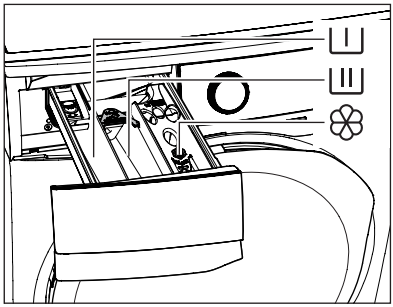

- “预洗”投放格

  此投放格仅用于放置选择“预洗”选项时所用的洗涤剂。

- “主洗”投放格

  此投放格用于放置所有程序所用的洗涤剂。

  洗涤剂翻板

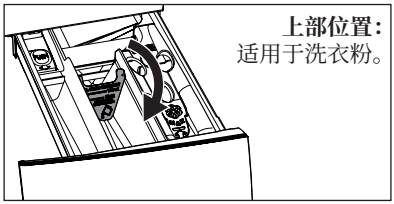

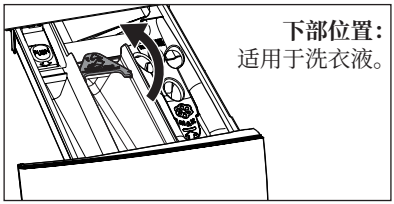

- “柔顺剂”投放格

  此投放格用于放置织物柔顺剂和上浆剂。

当您使用洗衣液时

- 请勿使用胶状或粘稠洗衣液。
- 请勿超过洗衣液最高液位。
- 请勿设置“预洗”环节。
- 请勿设置“预约”。

2. 量取洗涤剂和织物柔顺剂。
   - 拉出洗涤剂分配器抽屉，直至其停止。
   - 量取所需的洗涤剂用量，然后将其倒入主洗投放格 II。

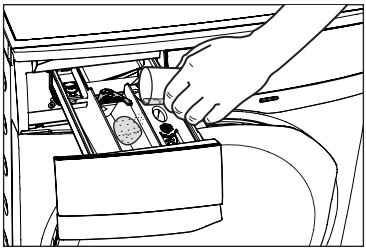

   - 如果您希望执行“预洗”阶段，请将其倒入标记 I 的投放格。

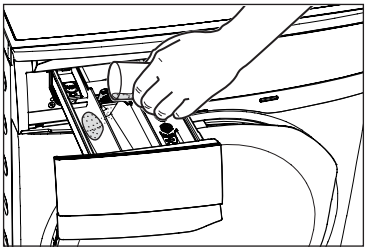

   - 如果需要，请将织物柔顺剂倒入标记 ❀ 的投放格中。

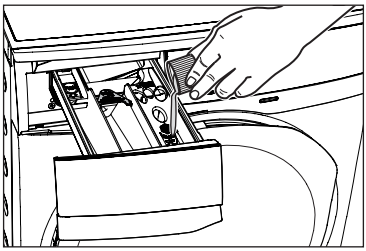

   - 轻轻关上抽屉。

注意

柔顺剂用量不得超过抽屉中的“MAX”标记位置。
如果要使用浓稠的柔顺剂，建议使用水进行稀释。

注意

洗涤剂、柔顺剂和水可能会残留在分配器抽屉中。建议定期清洁分配器抽屉以清除残留物。

5.3 选项设置

1. 如果希望使用不同于洗衣机建议的脱水速度和温度洗涤衣物，请重复按“脱水”和“温度”触摸按键来改变脱水速度和温度。

   如果您希望使用特殊功能洗涤衣物，请按“选项”触摸按键。

注意

- 根据所选程序，可以组合不同的功能。
- 如果选项与所选程序不兼容，显示屏上的“---”图标将闪烁，并发出蜂鸣声。

2. 如果您想要使程序延迟启动，请反复按下“预约”触摸按键来选择洗衣干衣机延迟时间。

5.4 启动洗涤 (▷||)

按下“启动 / 暂停”触摸按键可启动程序。相应的指示灯将停止闪烁，屏幕上将显示默认的程序运行时间。

启动程序大约 15 分钟后：

- 本设备将根据衣物类型和装载量来调整所选程序的运行时间。
- 显示屏将显示调整的程序运行时间。

注意

如果您在程序运行时按下任何触摸按键，则显示屏上的“_ _ _”图标将闪烁 3 次，同时发出蜂鸣声。（“启动 / 暂停”触摸按键和“电源开 / 关”按钮除外）

5.5 中断程序

- 要暂停，请按下“启动 / 暂停”。指示灯将开始闪烁。
- 再次按下“启动 / 暂停”按钮。程序将继续运行。

5.6 更换程序

只有关掉本机才能更改正在运行的程序。

- 按下“电源开 / 关”按钮可取消程序并关闭本机。
- 再次按下“电源开 / 关”按钮可启动本机。

现在，您可以设置新的洗涤程序并更改任何可用选项。按下启动 / 暂停按钮可启动新程序。

注意

本机不会进行排水作业（清新除味、脱水、漂洗 + 脱水程序除外）。

5.7 更改选项

在程序启动后，可以更改部分选项。

1. 按下“启动 / 暂停”触摸按键。指示灯将开始闪烁。
2. 如果可用，请更改您希望使用的选项。
3. 再次按下“启动 / 暂停”按钮。程序将继续运行。

5.8 打开机门

当程序或“预约”运行时，机门将上锁，并且显示屏上的“🔒”指示灯将亮起。按下“启动/暂停”触摸按键将机器设置为“暂停”。等待直到机门锁定指示灯熄灭，然后可以打开机门。

如果机门锁定指示灯“🔒”仍然处于亮起状态，这表明机器已经加热，并且水位高于机门的底部边缘或滚筒正在旋转。在这种情况下，无法打开机门。若要打开机门，需先进行排水。

如遇紧急情况，请参阅第 81 页的“应急开门程序”。

5.9 程序结束时

- 本机会自动停止。
- 声音信号将会启动。
- 显示屏将显示“End”。
- “启动 / 暂停”触摸按键指示灯熄灭。
- 机门锁定指示灯“🔒”熄灭。
- 将衣物从本机中取出。确保滚筒内部已经全部清空。
- 请保持机门稍微开启，以防止产生霉菌及气味。
- 关闭水龙头。

注意

在程序结束时，由于在装载量感应阶段过高估计了程序所需时间，剩余时间可能从 7 分钟或更短时间直接减少到 0。如果装载量达到完美的平衡状态，装载量感应阶段完成后，程序时间会比估计时间短一些。对于本机来说，这属于正常现象，无需特别注意，且不会影响机器性能。

5.10 洗涤程序已结束，但滚筒中仍然有水

（已使用“延迟脱水”选项）

- 滚筒规律旋转以防止衣物褶皱。
- “启动 / 暂停”指示灯闪烁提醒您进行排水。
- 机门锁定指示灯“🔒”亮起。机门保持锁定。

您必须进行排水才能打开机门：

要排水，请执行下列操作：

1. 按下“启动 / 暂停 ▷‖”触摸按键。本机会以所选程序的最大脱水速度进行排水并脱水。

或者，在按下“启动 / 暂停”触摸按键之前，您可以按下“脱水”触摸按键来改变脱水速度。如果希望机器仅执行排水操作，则可以选择“不脱水 (– – –)”选项。

2. 程序结束且机门锁定指示灯“🔒”熄灭后，您即可打开机门。
3. 按下“电源开 / 关”按钮停用本机。

注意

在大约 18 小时后，如果您没有按下“启动 / 暂停”触摸按键，本设备将进行自动排水和脱水（“羊毛”程序除外）。

5.11 自动关闭模式

“自动关闭”功能可在以下情况下自动停用本机以降低能耗：

- 您在按下“启动 / 暂停”5 分钟前未按下任何按钮。
  - 按下“电源开 / 关”按钮重新启用本机。
- 洗涤程序结束 5 分钟后。
  - 按下“电源开 / 关”按钮重新启用本机。显示屏将显示最后一次洗涤的结束时间。
  - 再次按下任何触摸按键以显示最后一次洗涤程序。

6. 日常使用 - 仅限烘干

1. 按下“电源开 / 关”按钮打开机器。

   水龙头必须打开，排水软管必须放在水槽中或连接到排水管。

2. 装入衣物。确保洗涤衣物量未超过机器的最大烘干容量。
3. 转动旋钮来设置一个清洗程序，可以根据衣物类型选择烘干选项（参见第 54 页的程序图），然后按**洗衣 / 烘干模式**触摸按键将您的机器切换到**烘干 ( ) 模式**。
4. 如果您希望选择自动烘干选项，请按下“烘干程度”选项，直到显示器上显示与所需烘干程度相对应的图标。（请参阅第 58 页）
5. 如果您希望选择定时烘干选项，请重复按“烘干时间 ”选项，直到显示所需烘干时间。（请参阅第 59 页）
6. 按下“启动 / 暂停 ”触摸按键以启动程序。剩余时间每分钟更新一次。
7. 在程序结束时：
   - 声音信号将会启动。
   - 显示屏将显示“End”，并且“防皱 ( )”图标会亮起。
   - 机门锁定指示灯“ ”仍然处于亮起状态。
   - 本机将执行大约 10 分钟的防皱环节。

   防皱环节完成后，机门锁定指示灯“ ”会熄灭。显示屏将显示“End”。

   如果您想要在防皱环节打开门或中断程序，请按下“启动 / 暂停”触摸按键。

8. 按下“电源开 / 关”按钮关闭机器。
9. 在每个烘干运行结束时，衣物的温度会很高。为了您的安全，请打开机门使衣物冷却，然后再取出。

7. 日常使用 - 洗涤和烘干（连续程序）

7.1 洗涤程序 +“烘干程度”选项

1. 装入衣物并加入洗涤剂和织物柔顺剂。确保洗涤衣物量未超过机器的最大烘干容量。
2. 转动旋钮来设置一个清洗程序，可以根据衣物类型选择烘干选项（参见第 54 页的程序图），然后按**洗衣 / 烘干**模式触摸按键将您的机器切换到**洗涤和烘干** (/) 模式。
3. 按相关触摸按键选择所需选项。如有可能，请勿选择低于本机器建议的脱水转速，以避免烘干时间过长，从而节省能源。
4. 通过按下“烘干程度”触摸按键来设置烘干程度。然后，显示屏将显示洗涤和烘干运行总持续时间。

   如果程序与所选烘干选项不兼容，显示屏上的“---”图标将会闪烁。

5. 按下“启动 / 暂停”触摸按键启动程序。剩余时间每分钟在显示屏上更新一次。

6. 在程序结束后按电源开 / 关按钮关闭机器。

在每个烘干运行结束时，衣物的温度会很高。为了您的安全，请打开机门使衣物冷却，然后再取出。

注意

- 如果您希望在防皱环节打开机门或中断程序，请按下“启动 / 暂停”触摸按键。
- 对于一些程序而言，有些烘干程度选项并不适用。
- 当选择“熨干 ☼”选项时，启动程序大约 15 分钟后，显示屏时间将根据衣物类型和装载量进行调整。

  显示屏将显示新的运行时间。
- 选择“特干 ☼”或“晾干 ☼”时，如果机器感测到已经达到所需烘干程度，显示屏时间将会调整至烘干运行结束时间。在衣物量低于最大装载容量的情况下，剩余时间会突然从大约 50 分钟减少到 0。

7.2 洗涤程序 +“烘干时间 ⏱”选项

1. 装入衣物并加入洗涤剂和织物柔顺剂。确保洗涤衣物量未超过机器的最大烘干容量。
2. 转动旋钮来设置一个洗涤程序，可以根据衣物类型选择烘干选项（参见第 54 页的程序图），然后按**洗衣 / 烘干模式**触摸按键将您的机器切换到**洗涤和烘干** (🧺 / 🧺) 模式。
3. 按相关触摸按键选择所需选项。如有可能，请勿选择低于本机器建议的脱水转速，以避免烘干时间过长，从而节省能源。
4. 通过反复按“烘干时间 ⏱”触摸按键来设置烘干时间，直到显示所需时间。然后，显示屏将显示洗涤和烘干运行总持续时间。

   如果程序与所选烘干选项不兼容，显示屏上的“– – –”图标将会闪烁。
5. 按下“启动 / 暂停”触摸按键启动程序。剩余时间每分钟在显示屏上更新一次。
6. 在程序结束后按“电源开 / 关”按钮关闭机器。

在每个烘干运行结束时，衣物的温度会很高。为了您的安全，请打开机门使衣物冷却，然后再取出。

注意

- 如果您希望在防皱环节打开设备门或中断程序，请按下“启动 / 暂停”触摸按键。
- 如果您只设置了 10 分钟的烘干时间，本机将只执行冷却 (🌱) 阶段。

8. 洗涤提示

8.1 分类洗涤

请按照每件服装标签上的洗涤代码符号和制造商的洗涤说明进行洗涤。按如下方式对衣物进行分类：白色、彩色、化纤、精细织物、羊毛。

8.2 温度

温度	脏污程度
90°C	适用于脏污程度一般的白色棉麻织品（例如茶杯垫、毛巾、桌布、床单等）。
60°C 50°C	适用于色彩鲜艳、脏污程度一般（如衬衫、晚礼服、睡衣等）的亚麻、棉质或化纤面料衣物和轻微脏污的白色棉质衣物（例如内衣）。
40°C 30°C 冷水	适用于精细织物（例如网帘）、包括化纤面料在内的混合织物，以及带有“纯羊毛、不缩水、可机洗”标签的羊毛服装。

8.3 装入衣物之前

- 确保所有金属物体已从衣物中取出（例如硬币、发夹、别针和饰针等）。

- 扣紧枕套、拉上拉链、扣上钩形扣和子母扣。绑紧所有的腰带和长束带。

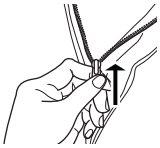

- 请将内衣、裤袜和其他精细衣物放入网格洗衣袋中，洗衣袋可在超市自行购买。
- 请勿将易掉毛与易粘毛的衣物混在一起清洗。
- 请勿将白色和彩色衣物混洗。否则白色衣物会被染色。
- 新衣物在第一次清洗时可能会掉色；因此必须单独清洗。
- 清洗前请去除顽固污渍。
- 请用特制洗涤剂或洗涤膏反复擦拭顽固污渍。请对窗帘进行特别处理。
- 取下挂钩或将其系在袋子或网罩上。

8.4 最大装载量

推荐装载量可在第 54 页的程序图中找到。

通用规则：

装载衣物	重量
棉、亚麻	可将滚筒装满，但衣物间需留有缝隙；
化纤	不能超过滚筒装载量的一半；
精细织物和羊毛	不能超过滚筒装载量的三分之一。

在衣物达到最大装载量的情况下，可最有效地利用水和能源。若要清洗重污衣物，可适当减少装载量。

8.5 去除污渍

仅仅使用水和洗涤剂可能无法直接去除顽固污渍。因此建议您在清洗前对其进行处理。

血渍：请用冷水处理新鲜的血渍。对于干血渍，请用特殊洗涤剂在水中浸泡一夜，然后用肥皂和水擦拭。

油性涂料：请用汽油污渍去除剂，将衣服放在柔软的布上，然后反复多次轻拍污渍。

干油渍：请先用松节油润湿，将衣服放在柔软的布上，然后用指尖和棉布轻轻擦拭污渍。

锈渍：使用溶于热水的草酸或在冷水中使用除锈产品清洗。请小心处理陈年锈渍，因为纤维素结构已经被破坏，因此织物很容易破洞。

霉菌渍：请用漂白剂处理，然后冲洗干净（仅适用于白色和彩色不褪色衣物）。

草渍：用肥皂轻轻擦拭，然后用漂白剂处理（仅适用于白色和彩色不褪色衣物）。

圆珠笔印和胶水：用丙酮 (*) 润湿，将衣服放在软布上，轻拍污渍。

口红印：如上所述用丙酮 (*) 润湿，然后用甲基化酒精处理污渍。可用漂白剂去除白色织物上的任何残留痕迹。

红酒印：将衣物浸泡在水和洗涤剂中，用乙酸或柠檬酸冲洗并处理，然后冲洗干净。可用漂白剂处理任何残留痕迹。

墨水迹：根据油墨的类型，先用丙酮 (*) 润湿衣物，然后用醋酸润湿；用漂白剂处理白色织物上的残留痕迹，然后彻底冲洗干净。

焦油污渍：首先用去污剂、甲基化酒精或汽油处理，然后用膏状洗涤剂擦拭。

(*) 请勿在人造丝上使用丙酮。

8.6 洗涤剂类型和用量

本洗衣干衣机需搭配低泡沫洗涤剂使用，以避免泡沫过多导致洗涤效果不尽如人意和对机器造成伤害的情况。

专为滚筒式洗衣机设计的低泡沫洗涤剂贴有“滚筒式”、“高效”等标签。

请勿在滚筒式洗衣干衣机中使用错误类型的洗涤剂，例如用于直筒式洗衣机或手洗用洗涤剂，或肥皂产品。这可能会导致出现过多泡沫、循环时间过长、脱水速度低、漂洗效果不佳以及电机过载。

洗涤剂用量

正确选择洗涤剂及用量不仅会影响您的洗涤效果，还有助于避免浪费，同时也能够保护环境。洗涤剂虽然可生讲解，但是含有大量可破坏自然微妙平衡的物质。

洗涤剂的选择和用量取决于：

- 衣物类型（精细织物、羊毛、棉麻等）；
- 衣物颜色；
- 装载量；
- 脏污程度；
- 洗涤温度；和
- 用水硬度。

水的硬度是根据所谓“硬度等级”来划分的。

有关您所在地区的用水硬度信息可从相关的供水公司或当地管理局获取。

建议您先按照洗涤剂制造商推荐的用量来进行清洗，然后与下面列出的清洗效果相比较，以针对日后的清洗工作相应调整洗涤剂用量。

洗涤剂用量不足将导致：

- 衣物变灰，
- 衣物残留污渍。

洗涤剂用量过多将导致：

- 过度磨损，
- 降低洗涤效果，
- 漂洗不干净。

以下情况请使用少量洗涤剂：

- 当您在清洗少量衣物时，
- 衣物轻微脏污，
- 在清洗过程中产生了大量泡沫。

9. 烘干提示

9.1 烘干运行准备

本机采用冷凝原理，可作为烘干机使用。

因此，必须打开水龙头，排水软管必须将水排入水槽或排水管，即使在烘干运行期间也是如此。

注意！

在启动烘干程序之前，确保装载量未超过机器的最大烘干容量。以实现更好的烘干效果。**（参见第 54 页）**

9.2 不适合烘干的衣物

- 诸如化纤窗帘、羊毛和丝绸制品、带金属内饰的衣服、尼龙袜等特别精细的织物，还有厚夹克、床单、被褥、睡袋和羽绒被等大件切勿用机器烘干。
- 由于深色衣物很容易粘毛，因此避免将深色和浅色蓬松的衣物（例如毛巾等）一起烘干。
- 当本机完成烘干后将衣物取出。
- 为了避免在烘干完成时产生静电，在清洗衣物时请使用专门用于滚筒烘干机的织物柔顺剂或织物调理剂。
- 带海绵的衣物或材质类似于海棉的材料不得用机器烘干，否则会带来火灾隐患。
- 此外，残留定型剂或发胶、指甲油或类似溶液的衣物不得用烘干机烘干，以免生成有害气体。

在启动洗涤程序之前，必须将洗涤剂和任何添加剂放入分配器抽屉的对应投放格中。

如果使用洗衣液，则必须选择不带预洗的程序。

9.3 服装标签

请遵循制造商标签上给出的烘干指示：

= 可进行滚筒烘干

= 在高温下烘干

= 在低温下烘干

= 禁止滚筒烘干。

9.4 烘干运行持续时间

烘干时间会根据下列因素改变：

- 最后一次脱水的速度；

- 所需烘干程度（特干、即晾干或熨干）；
- 衣物类型；
- 洗涤衣物量。

定时烘干的平均烘干时间在“烘干时间”选项中显示（参见第 59 页）。根据不同的面料，帮助您以更合适的方式烘干衣物。

9.5 额外烘干

如果在烘干程序结束后衣物仍然潮湿，请再次选择时间较短的烘干程序。

警告！

切勿将衣物过度烘干，以免出现皱折或缩水。

10. 国际洗涤代码符号

衣物标签上的这些符号可帮助您选择最佳的洗衣方式。

强力洗 轻柔洗	95 最高洗涤温度 95 °C	60 最高洗涤温度 60 °C 60	40 最高洗涤温度 40 °C 40 40	30 最高洗涤温度 30 °C 30	手洗	不可洗
漂白	cl 冷水漂白			不可漂白		
熨烫	高温熨烫最高 200 °C		中温熨烫最高 150 °C	低温熨烫温度 110 °C		不可熨烫
干洗	A 可用所用溶剂进行干洗		P 可用四氯乙烯、汽油、纯酒精、R 111 和 R 113 进行干洗	F 可用汽油、纯酒精和 R 113 进行干洗		不可干洗
干衣	平摊干洗	悬挂干燥	置于衣架上	高温 低温 滚筒烘干		不可滚筒烘干

11. 保养与清洁

警告!

在任何清洁或维护工作开始之前，请务必断开本设备与电源的连接。

11.1 外部清洁

请使用肥皂和温水清洁本机。完全擦干所有表面。

注意!

请勿使用酒精、溶剂或化学制品清洁本机。

11.2 除垢

我们使用的水中通常含有石灰。最好定期在机器中放一些水软化粉。

请遵循软化粉制造商的说明，水质软化需与衣物清洗分开进行。

这将有助于防止石灰沉积物的形成。

11.3 每次洗涤后

请将机门打开一段时间。这有助于防止在本机内部产生霉菌和异味。

在清洗后将机门打开也可实现保护门密封的目的。

11.4 使用“筒清洁”程序维护清洁

使用低温洗涤功能时，可能会在滚筒内部积聚残留物。

我们建议您使用“筒清洁”程序定期清洗滚筒，从而清除所有残留物。

要运行维护清洗：

- 滚筒内应无衣物留存。
- 选择“筒清洁”程序。
- 按下“启动 / 暂停”按钮以启动程序。

11.5 清洁洗涤剂分配器抽屉

应定期清洁洗衣粉和添加剂分配器抽屉。

将锁扣向下按以将其拉出，然后取下抽屉。

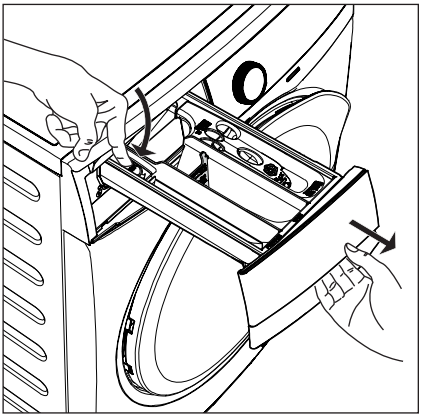

取下添加剂投放格的顶盖以便清洁。

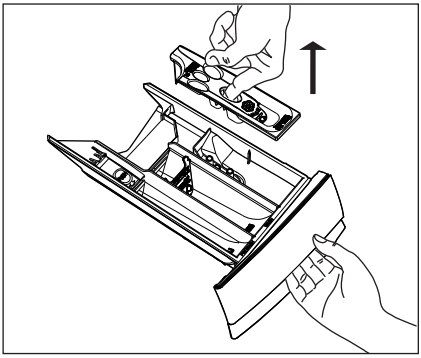

将其放在水龙头下冲洗，冲掉所有积聚的洗衣粉末。

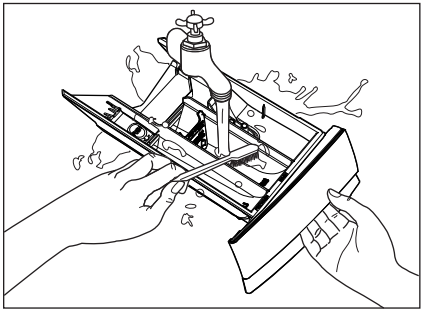

11.6 清洁抽屉凹槽

取下抽屉后，请使用小刷子清洁凹槽，确保清除凹槽上部和下部的所有洗衣粉残留物。将抽屉装回原位然后滚筒内不放衣物运行一次漂洗程序。

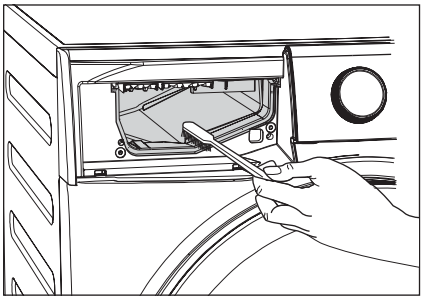

11.7 清洁排水泵

定期检查排水泵并确保其处于清洁状态。

在下列情况下清洁泵：

- 本机无法排水。
- 滚筒无法旋转。
- 由于排水泵堵塞，本机发出异常噪音。
- 排水出现问题，显示屏上会显示警报代码。

警告！

1. 断开电源插头与电源插座的连接。
2. 请勿在本机运行时拆下过滤器。请勿在本机中存有热水时对排水泵进行清洁。必须使水冷却，然后才能清洁排水泵。

要清洁排水泵：

1. 打开排水泵口。

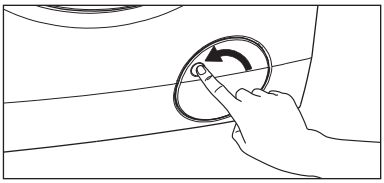

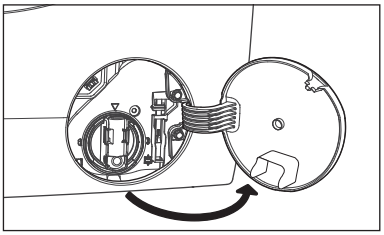

2. 在排水泵凹槽下方放置一个合适的水收集容器，以收集流出的水。

   按下两个拉杆并向前拉动排水管道，让水流出。

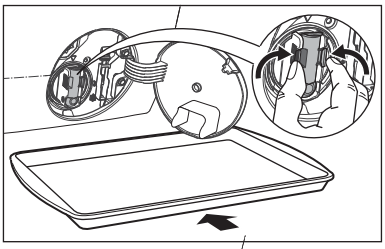

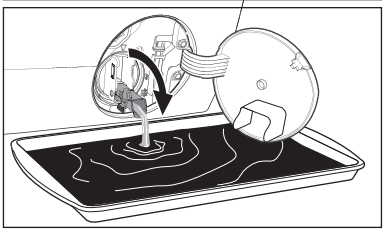

3. 当容器内充满水时，放回排水管，并将容器排空。重复执行步骤 2 和 3，直到不再有水从排水泵中流出。

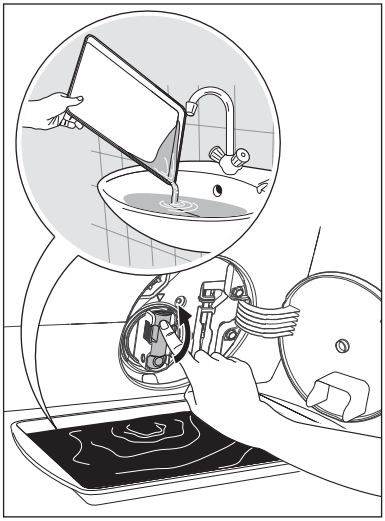

4. 放回排水管，并逆时针转动过滤器将其取出。

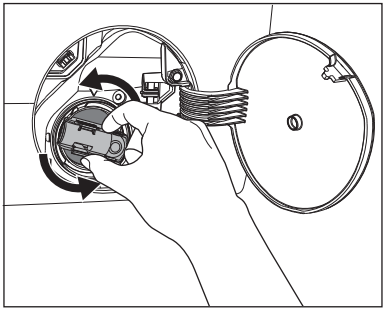

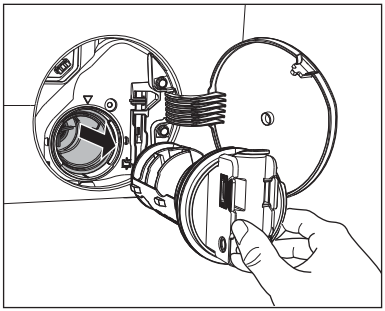

5. 取出泵中的绒毛和物体（如存在）。

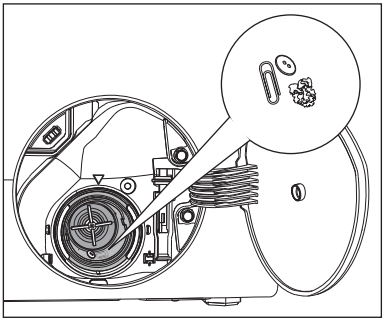

6. 请确保泵的叶轮可旋转。若不能旋转，请联系服务中心。

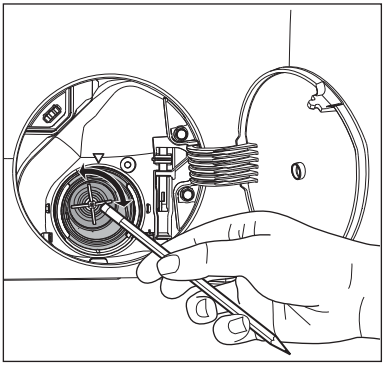

7. 在水龙头下清洁过滤器。

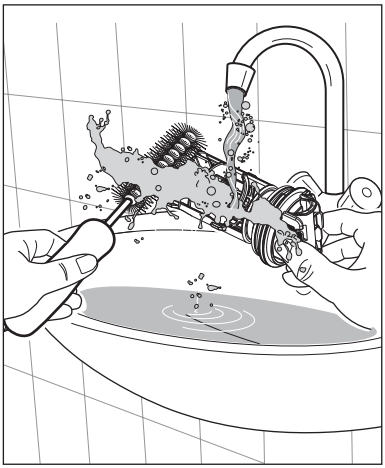

8 将过滤器放回，露出部分朝上。确保正确拧紧过滤器以防泄漏。

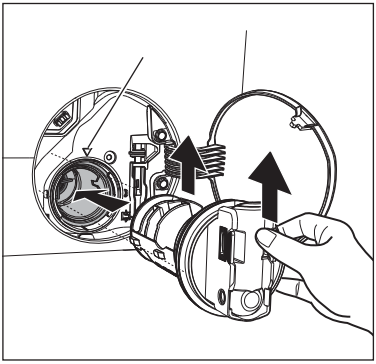

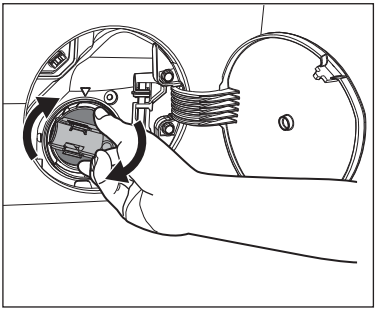

9. 关闭排水泵口。

11.8 清洁进水软管过滤器

如果用水的硬度很高或含有微量石灰沉积物，则进水口过滤器可能会堵塞。因此，最好定期对其进行清洁。

要清洁进水软管过滤器：

1. 关闭水龙头。
2. 将进水软管从水龙头上拆下。
3. 用硬毛刷清洁进水软管内的过滤器。

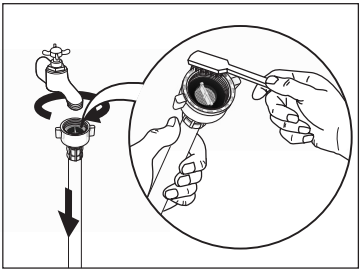

4. 拆下本机后面的进水软管。

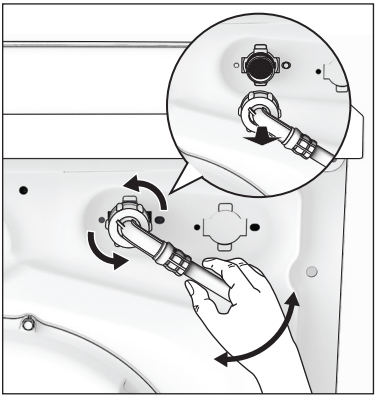

5. 用硬毛刷或毛巾清洁进水阀内的过滤器。

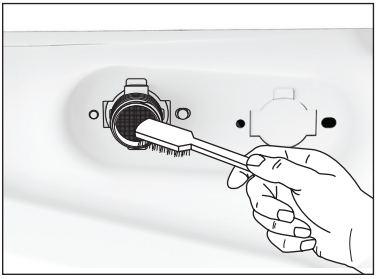

6. 再次安装进水软管。确保拧紧管接头以防泄漏。
7. 打开水龙头。

11.9 防冻措施

若将本机安装于温度可达 0°C 以下的区域，请将残留在进水软管和排水泵中的水排出。

应急排水

1. 断开电源插头与电源插座的连接。关闭水龙头。
2. 取下进水软管。
3. 从后支架上取下排水软管，并将其从水槽或水龙头上解开。

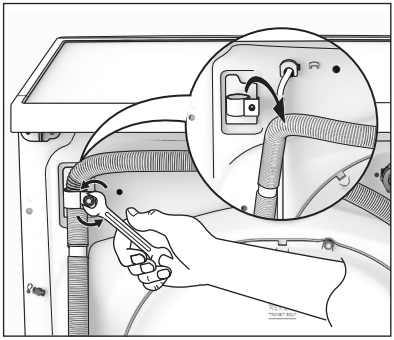

4. 将排水软管和进水软管的末端放入容器中。让水从软管中流出。

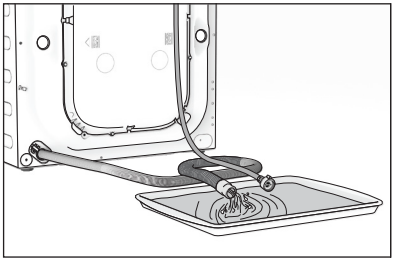

5. 当没有水流出时，再次安装进水软管和排水软管。

注意：

在重新使用本机前，请确保温度在 0°C 以上。

12. 故障检修

12.1 可能出现的故障

某些问题是缺乏简单的维护或疏忽导致的，无需工程师协助即可轻松解决。

在联系当地服务中心之前，请先进行故障排查。

问题得到解决后，请按“启动 / 暂停”按钮重新启动程序。如果经过全面检查后问题仍然存在，请与当地的服务中心联系。

警告！在排查故障前，请先停用本机。

警报代码：

E 10	无法正确为本机加水。
E 20	本机无法排水。
E 40	机门开启或未正确关闭。请检查机门！
E H0	电源不稳定。等待至电源恢复稳定。
C 91	本机的电子元件之间无通信。 将其关闭并再次打开。

故障	可能原因	解决方案
机器无法启动：	机门尚未关闭。（错误代码：E 40）	将机门关紧。
	插头未正确插入电源插座。	将插头插入电源插座。
	插座没有电。	请检查您的家庭电气安装。
	尚未按下“启动/暂停”触摸按键。	按下“启动/暂停”触摸按键。
	已选择“预约”。	如果要立即开始清洗，请取消“预约”。
	电源不稳定。（如果 E H0 出现在显示屏上。）	等待至电源恢复稳定。本机将自动启动。
机器未注满水：	水龙头关闭。（错误代码：E 10）	打开水龙头。
	进水软管被压扁或打结。（错误代码：E 10）	检查进水软管连接。
	进水软管中的过滤器堵塞。（错误代码：E 10）	清洁进水软管过滤器。
	机门未正确关闭。（错误代码：E 40）	将机门关紧。
机器灌满水然后又将水排除：	排水软管的末端位置过低。（错误代码：E 10）	请参阅“排水”一节的相关段落。

故障	可能原因	解决方案
洗衣机不排水或者不脱水	排水软管被压扁或打结。（错误代码：E 20）	检查排水软管连接。
	排水泵堵塞。（错误代码：E 20）	清洁排水过滤器。
	已选择“延迟漂洗”选项。	按“启动 / 暂停”触摸按键进行排水或选择脱水程序。
	滚筒中的衣物分布不均匀。	暂停机器并重新进行手动分配。
地板上有水。	洗涤剂过量或类型不合适（产生过多的泡沫）。	减少洗涤剂用量并使用正确类型的洗涤剂（参见第 69 页）。
	检查进水软管设施是否有任何泄漏。当水顺着软管往下滴落时，不是很容易检查出是否有泄漏；可通过检查软管是否潮湿来判断。	检查进水软管连接。
	排水软管损坏。	致电服务中心。
洗涤效果不尽如人意:	洗涤剂用量太少或类型不合适。	增加洗涤剂用量或使用不同类型的洗涤剂（参见第 69 页）。
	洗涤前未处理顽固污渍。	使用去污产品去除顽固污渍。
	未选择合适的温度。	检查您是否选择了正确的温度。
	衣物装载量过大。	减少装载量。
打不开机门:	程序仍在运行。	等待直至运行结束。
	滚筒中仍然有水。	必须将水排空再将机门打开（参见第 64 页的“打开机门”）。
	此问题可能是由电器故障引起的。	联系服务中心。如需打开机门，请仔细阅读第 81 页的“应急开门程序”。
机器振动或有噪音:	运输螺栓和包装材料尚未拆除。	检查本机是否正确安装。
	支撑脚尚未调整。	检查本机是否正确调平。

故障	可能原因	解决方案
机器振动或有噪音：	滚筒中的衣物分布不均匀。	暂停机器并重新进行手动均匀。
	滚筒中的衣物很少。	装载更多衣物。
	地板（例如木地板）不平整。	请参阅“定位”一节的相关段落。
运行时间长于显示时间：	洗涤剂过量。	减少洗涤剂用量或使用其他洗涤剂。（参考第 69 页的“洗涤剂类型和用量”）。
	机器不平衡。	手动重新分配滚筒内的衣物，然后再次启动脱水环节。
程序的持续时间短于显示时间。	本机会根据衣物装载量计算新的运行时间。	
脱水开始较晚或机器不进行脱水：	由于衣物在滚筒中分布不均，已接通电子不平衡检测装置。通过反向旋转滚筒重新分配衣物。 这种情况可能会在不平衡情况得到解决之前发生几次，然后可以恢复正常的脱水操作。如果在 10 分钟后，衣物仍未在滚筒中均匀分布，则机器将不会进行脱水。在这种情况下，请手动重新分配装载衣物并选择脱水程序。	暂停机器并重新进行手动分配。
机器发出异常噪音：	机器安装不正确。	确保本机正确调平。请参阅“安装”。
	未拆除运输螺栓或包装。	确保已拆除包装和 / 或运输螺栓。请参见“拆箱”。
	装载量可能过小。	在滚筒中添加更多的衣物。
滚筒中没有水：	机器运用现代科技，运行时用水量非常少但并不影响性能。	

故障	可能原因	解决方案
机器无法烘干或无法正确烘干衣物。	尚未选择“烘干时间”或“烘干程度”。	选择烘干时间或烘干程度。
	水龙头未打开。（错误代码：E 10）	打开水龙头。
	排水过滤器堵塞。（错误代码：E 20）	清洁排水过滤器。
	机器过量装载。	减少衣物装载量。
	所选择的烘干程序、时间或烘干程度不适合。	选择适合的烘干程序、时间或烘干程度。
烘干程序结束后，显示屏时间保持停止状态，停止时间超过 30 分钟：	机器会根据衣物类型和装载量优化烘干程序。每种织物的吸水能力不同，因此烘干时间也有所不同。	对于本机来说，这属于正常现象，无需特别注意，且不会影响机器性能。

注意：

如果您无法确认或解决问题，请联系我们的服务中心。在致电服务中心之前，请明确您的机器型号、序列号和购买日期：服务中心会向您询问这些信息。

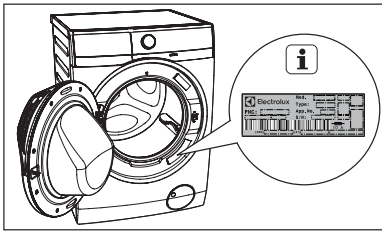

12.2 应急开门程序

若出现断电或电器故障，则机门将保持锁定状态。电力恢复后，洗涤程序将继续运行。若机门在出现故障时保持锁定状态，可通过应急解锁功能将其打开。

在打开机门之前：

警告！

确保水温不会太高且衣物不会太热。必要时，请等待至衣物冷却。

确保滚筒内的水位不会太高。如有必要，请执行“应急排水”（参见第 76 页）。

确保滚筒未旋转。请等待至滚筒停止旋转（如有必要）。

要打开机门，可按下列步骤进行：

1. 按下“电源开 / 关”按钮关闭本机。
2. 断开电源插头与电源插座的连接。
3. 打开过滤器盖。
4. 先不要拉机门。将一个小平头螺丝刀插入紧急解锁带（红色）的插槽中，然后向下拉两次，接下来将机门拉开。如果没有拉开，请再次尝试。

   注意：切勿太用力拉紧急解锁带。

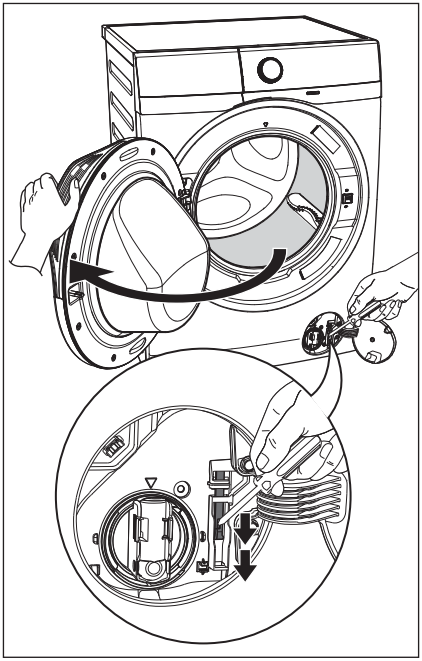

5. 拿出衣物。
6. 关闭过滤器盖板。

13. 技术参数

尺寸（高度 / 宽度 / 深度）		85 X 60 X 65.9 cm	
电源（电压 / 频率）		220-240 V~ / 50 Hz	
额定输入功率		洗衣：2100 W/ 烘干：1500 W	
保险丝电流		10 A	
水压范围（最大 / 最小）		0.8 MPa / 0.05 MPa	
最大衣物容量（洗衣、干衣量）		洗衣	烘干
	棉麻	11 kg	7 kg
	混纺	4 kg	3 kg
	大件	3 kg	–
	运动服	4 kg	–
	节能	11 kg	7 kg
	清新除味	1.5 kg	–
	筒清洁	–	–
	脱水	11 kg	7 kg
	漂洗 + 脱水	11 kg	7 kg
	快洗 15'	1.5 kg	–
	日常 60'	5.5 kg	4 kg
	羊毛	2 kg	1 kg
	精细	4 kg	–
	洗干 60'	1 kg	1 kg
	预设	–	–
脱水速度（最大 / 最小）		1400 rpm / 400 rpm	

14. 安装

14.1 拆箱

注意！

使用本机前必须拆下所有运输螺栓和包装。

建议您保留所有运输装置，以便再次运输时对其进行重新安装。

1. 佩戴手套。剪开并拿掉四个捆绑带，如图所示。

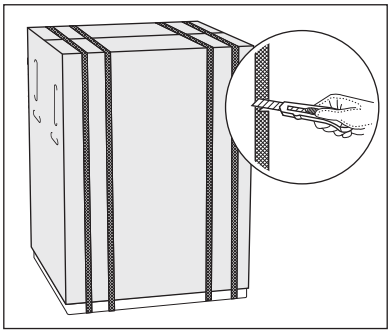

2. 拆下纸箱。拆下聚苯乙烯包装材料。
   拆下盖住机器的塑料袋。

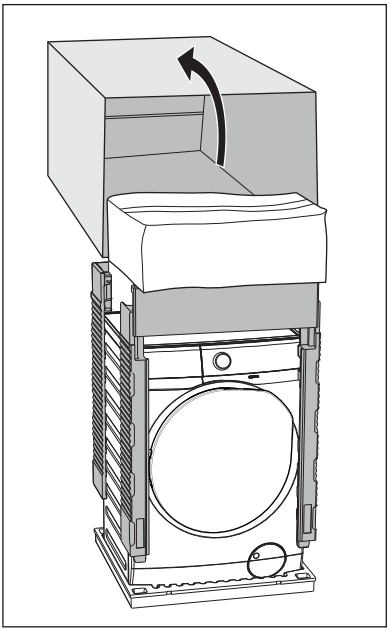

3. 打开机门。拆下机门密封处的聚苯乙烯材料并取出滚筒内的所有物品。

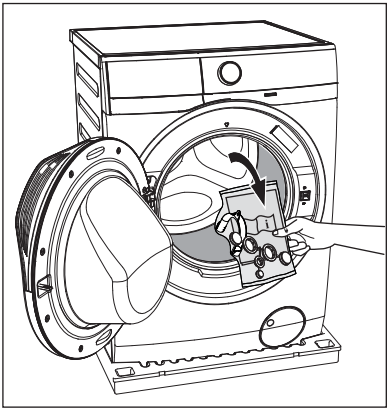

4. 取一块聚苯乙烯包装材料放在电器后方的地板上。小心将电器放倒，使其后侧位于此包装材料上。确保不要损坏软管。

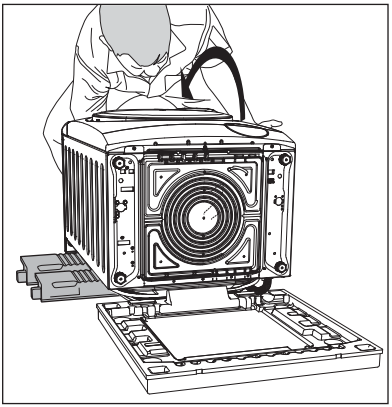

5. 拆下聚苯乙烯底座。

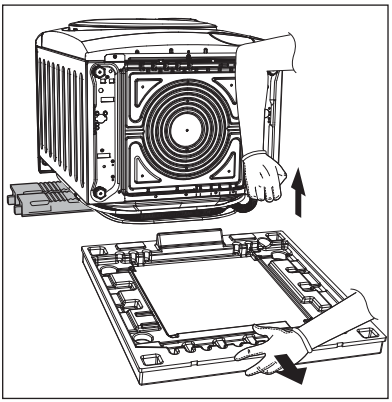

6. 搬起电器使其处于直立位置。
7. 从电器背面的软管支架 (A) 上卸下电源线、排水软管和进水软管。

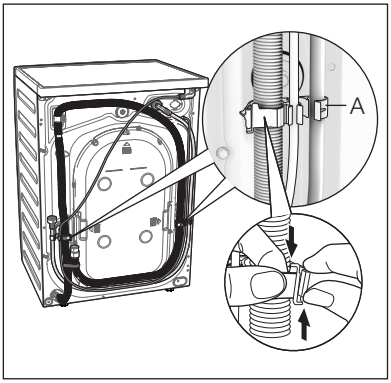

8 拆下三个螺栓。

9. 拔出塑料垫片。

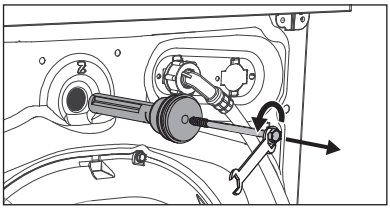

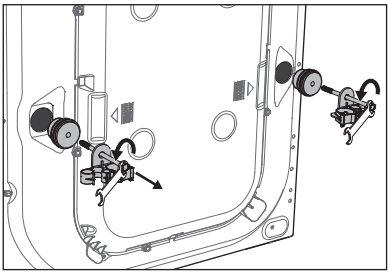

10. 用塑料盖堵住螺栓孔 (X3)。塑料盖在用户手册包中。

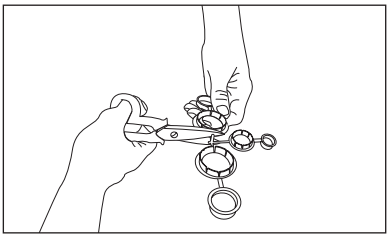

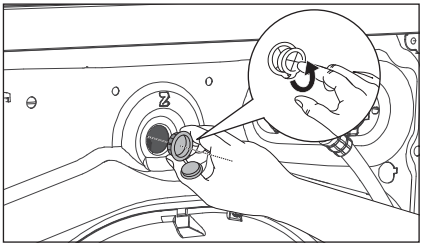

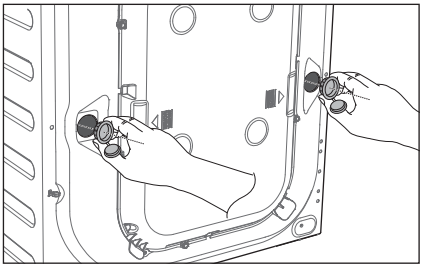

14.2 定位

重要的是，您的洗衣干衣机必须牢固且平整地放置在地板上以确保其正常运行。请勿将本机安装在可上锁的门、滑动门或反面带有铰链的门后面，以避免限制洗衣干衣机门打开。

使用洗衣干衣机顶部和侧面的水平仪检查其是否完全水平。

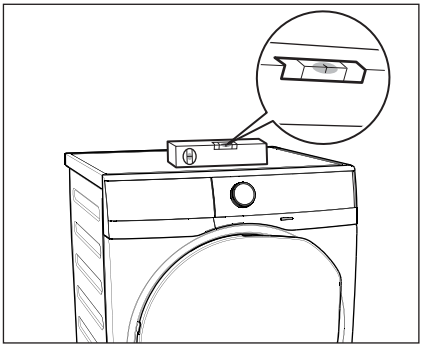

如果没有水平仪，也可使用门框、橱柜或工作台的边缘检查洗衣干衣机是否水平。

通过松开或拧紧底脚来调整本机的水平度。适当调整本机的水平度可防止本机在运行时出现振动、噪音和移动现象。

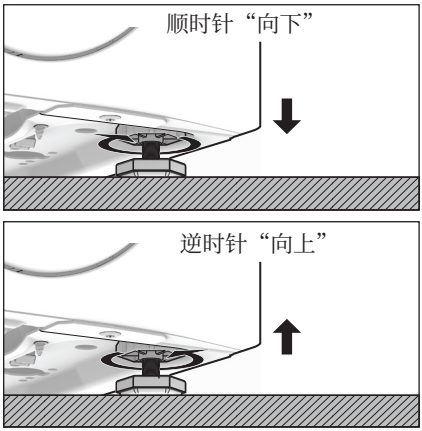

当洗衣干衣机完全水平时，请按对角线摇晃洗衣干衣机。如果确实不平，请再次调整电器腿，直至完全平稳而不会摇晃。

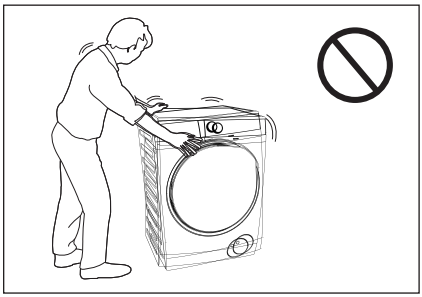

切勿通过在机器下放置纸板、木材或类似材料的方式来填补地面的不平整处。应将本机安装于平坦坚硬的地板上。切勿在机器周围放置地毯等阻碍物，以确保空气充分流通。

确保机器不与墙壁或橱柜相接触。

14.3 进水口

通过 3/4" BSP 管螺纹接头将进水软管连接至水龙头。

使用洗衣干衣机随附的软管。切勿使用旧软管。

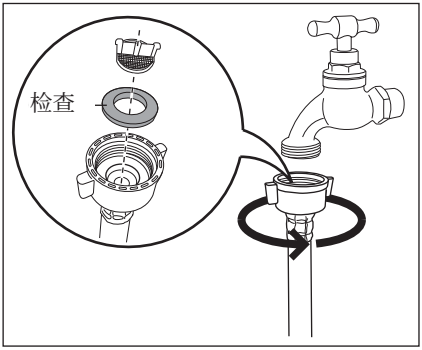

进水软管不可加长。如果软管太短而您不想移动水龙头，则需购买专为此类用途而设计的新的更长软管。

拧松环形螺母，使软管向左或向右倾斜，具体取决于水龙头的位置。不要将进水软管朝下放置。放置进水软管后，请务必再次拧紧环形螺母以防止泄漏。

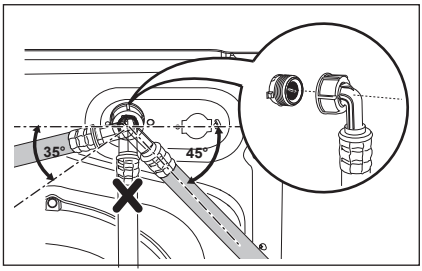

14.4 排水

排水软管的末端可以通过三种方式放置：

- 使用机器随附的塑料软管导向套**钩住水槽边缘**。

安装软管导向套

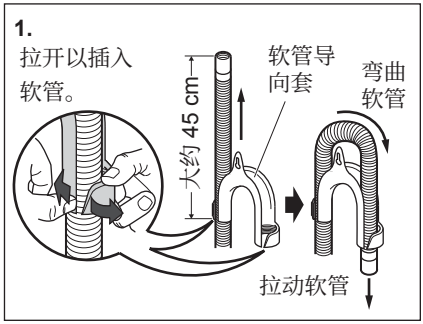

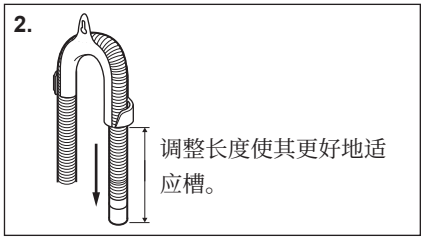

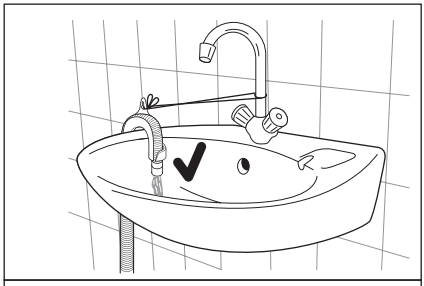

在这种情况下，请确保机器清空时末端没有脱钩。可以用一根绳子将其系在龙头上或将其连接到墙壁上。

- **排空水槽分支管中的水**。

  该分支管必须位于存水弯管上方，且弯曲部分高出地面至少 60 cm。

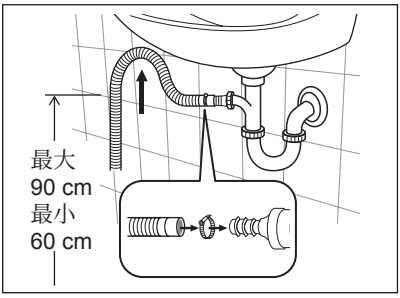

  将排水软管推到水龙头上并用夹子固定，确保排水软管围成一个环，以防止水槽中的垃圾进入电器。

- **直接插入排水管**，高度不小于 60 cm 且不超过 90 cm。

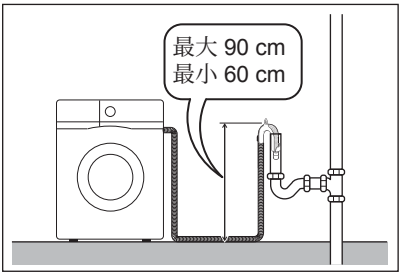

  排水软管的末端必须始终通风，也就是说立式排水管的内径必须大于排水软管的外径。

  排水软管不得扭曲或卷曲。请沿着地板放置；只需抬起靠近排水点的部分即可。

  为了使机器正常工作，排水软管必须钩在位于本机背面顶部的相应支撑件上。

14.5 电气连接

本机器电源电压 220-240 V，单相，50 Hz。

“不正确的电源连接可能会导致您的保修权利失效。”

检查您的家用电气安装是否可以承受所需的最大负载（参见第 82 页），同时还要考虑使用中的任何其他电器。

注意！
将机器连接到接地插座上。

对于因未遵守上述安全预防措施而对电器造成的损坏或伤害，制造商不承担任何责任。

如果电源线需要更换，则必须由我们的服务中心来执行。

安装完成后，电源线必须放置在易于接触的地方。

15. 环保信息

15.1 包装材料

标有符号 ♲ 的材料是可回收的。

>PE<= 聚乙烯

>PS<= 聚苯乙烯

>PP<= 聚丙烯

这代表可以通过将其妥善地放置在适当的收纳容器中来进行回收。

15.2 旧机器

通过授权处置站来处理旧电器。请大家一起维护环境的整洁！

产品或其包装上的符号 表明本产品不能当作生活垃圾处置，

而是应该交给适当的回收点，以便将电气与电子设备回收再利用。确保正确处置本产品，这将有助于防止其对环境和人类健康产生可能的负面影响，如若不然，本产品的不当废弃处理会给环境带来负面影响。

有关本产品回收再利用的更多详细信息，请联系当地的市政部门、生活垃圾处理服务机构或您购买本产品的商店。

15.3 生态保护提示

为了节省水资源和能源并为保护环境贡献力量，我们建议您遵循以下提示：

- 脏污程度一般的衣物可以跳过预洗环节，以节省洗涤剂、水和时间（同时也可以保护环境！）。
- 若机器满载运行，这样会更加经济。
- 可对污渍、一般的污物进行适当的预处理，随后可用较低的温度清洗衣物。
- 根据水的硬度、脏污程度和清洗衣服的数量来估计洗涤剂用量。

16. 维修服务指南

伊莱克斯家用电器“三包”标准

为保证使用伊莱克斯家用电器的消费者获得满意的售后服务，本公司将严格按照《中华人民共和国消费者权益保护法》、《中华人民共和国产品质量法》、《部分商品修理更换退货责任规定》等法律法规提供修理、更换、退货（简称“三包”）服务。

一、在“三包”有效期内，产品享受免费修理（包括材料费和工时费）；各产品的整机及主要部件的三包有效期如下：

名称	三包有效期 (年)		主要部件名称
	整机	主要部件	
电冰箱/红酒柜	1	3	压缩机，温控器，风扇电机，电磁阀，蒸发器，冷凝器，毛细管，过滤器，温控电路板，温度传感器
洗衣机/干衣机	1	3	电机，定时器，程控器，电容器，主控板，电机驱动板
空调	1	3	压缩机，风扇电机，温控器
吸油烟机	1	3	电机，主控板（含弱电和强电部分）
消毒柜	1	3	主控板，紫外线灯管，光波管，风机组件，门锁
燃气灶	1	3	燃气阀组件（阀体，电磁安全阀，热电偶，微动开关等），玻璃台面
嵌入式电灶	1	3	主控板，加热丝，温控装置
微波炉	1	2	主控板，电机，磁控管，定时器
嵌入式咖啡机	1	-	-
嵌入式烤箱/蒸箱	1	-	-
洗碗机	1	3	主控板，洗涤泵，加热器
暖灯/暖抽/真空抽屉	1	-	-

二、“三包”有效期自开具发票之日起计算。若产品实际交付时间晚于发票开具时间的，则“三包”有效期自实际交付日起计算。消费者享受“三包”应提供相应凭证，如：发票、收货凭证等。

三、对于为社会集团消费和生产消费购买的家用电器用户，其整机及主要部件“三包”有效期均为六个月。

四、本公司降价销售有外观瑕疵但不影响正常使用的家用电器,对其降价部位不再实行“三包”责任。

五、下列情况，不属于“三包”范畴之列，但可实行收费修理：

- 消费者搬运、安装、使用、维护、保管不当而损坏的。
- 自行或非经本公司授权维修中心拆修而造成损坏的。
- 无“三包”凭证及有效发票的。
- “三包”凭证型号与修理产品型号不符或涂改的。
- 因不可抗拒力造成产品损坏的。

伊莱克斯服务热线： 95105801

注意：本公司服务网络的名称、地址、邮编、电话、传真如有改动，本公司恕不另行通知并保留最终解释权。

产品保修卡

顾客信息

购买日期		发票号码	
顾客姓名		联系电话	
顾客地址及邮编			
产品名称		产品代码(PNC)	
产品型号		产品机号	
销售店名称		销售店电话	

维修记录

维修站名称 _____ 送修日 _____

故障内容 _____

故障原因 _____

维修内容 _____

维修技师签字 _____ 交验日期 _____

维修站名称 _____ 送修日 _____

故障内容 _____

故障原因 _____

维修内容 _____

维修技师签字 _____ 交验日期 _____

维修站名称 _____ 送修日 _____

故障内容 _____

故障原因 _____

维修内容 _____

维修技师签字 _____ 交验日期 _____

伊莱克斯（中国）电器有限公司

全国统一服务热线： 95105801

伊莱克斯官方网站： http://www.electrolux.com.cn

有害物质含量表

部件名称	有害物质					
	铅 Pb	汞 Hg	镉 Cd	六价铬 Cr6+	多溴联苯 PBBs	多溴二苯醚 PBDEs
电机	X	O	O	O	O	O
印刷电路板	X	O	O	O	O	O
排水泵	O	O	O	O	O	O
循环泵	O	O	O	O	O	O
加热器	O	O	O	O	O	O
门锁	O	O	O	O	O	O
电源线	O	O	O	O	O	O
控制面板	O	O	O	O	O	O
箱体	O	O	O	O	O	O
皮带	O	O	O	O	O	O
皮带轮	O	O	O	O	O	O
机门	O	O	O	O	O	O
门密封圈	O	O	O	O	O	O
内筒	O	O	O	O	O	O
外筒	O	O	O	O	O	O
底座	O	O	O	O	O	O
金属紧固件	O	O	O	O	O	O

说明：

1. 本表格按照 SJ/T-11364-2014 的规定编制。
2. “O”表示该有害物质在该部件所有均质材料中的含量在 GB/T26572-2011 规定的限量要求以下；
3. “X” 表示该有害物质至少在该部件的某一均质材料中的含量超出 GB/T26572-2011 规定的限量要求;
4. 上表中打 X 的部件，由于技术原因目前无法实现替代，今后随着技术进步，将实现替代或改进；
5. 本产品在正常使用情况下， 环保使用期限为 15 年。

NOTE/ 注意

www.electrolux.com.cn

G0024273-001-A12317360

由伊莱克斯（中国）电器有限公司进口

伊莱克斯（中国）电器有限公司
地址：湖南省长沙市长沙经济技术开发区漓湘路98号和祥科技园
邮编：410100
服务热线：95105801
网址：www.electrolux.com.cn

生产商：ELECTROLUX THAILAND (RAYONG) FACTORY

版本号：MU-W-20190301